Dimensions & Shipping Weight

FTA1100J

Mark IIXG Diesel Engine Fire Pump Controllers

With Modificaton N32 (8" Base Mounting Legs)

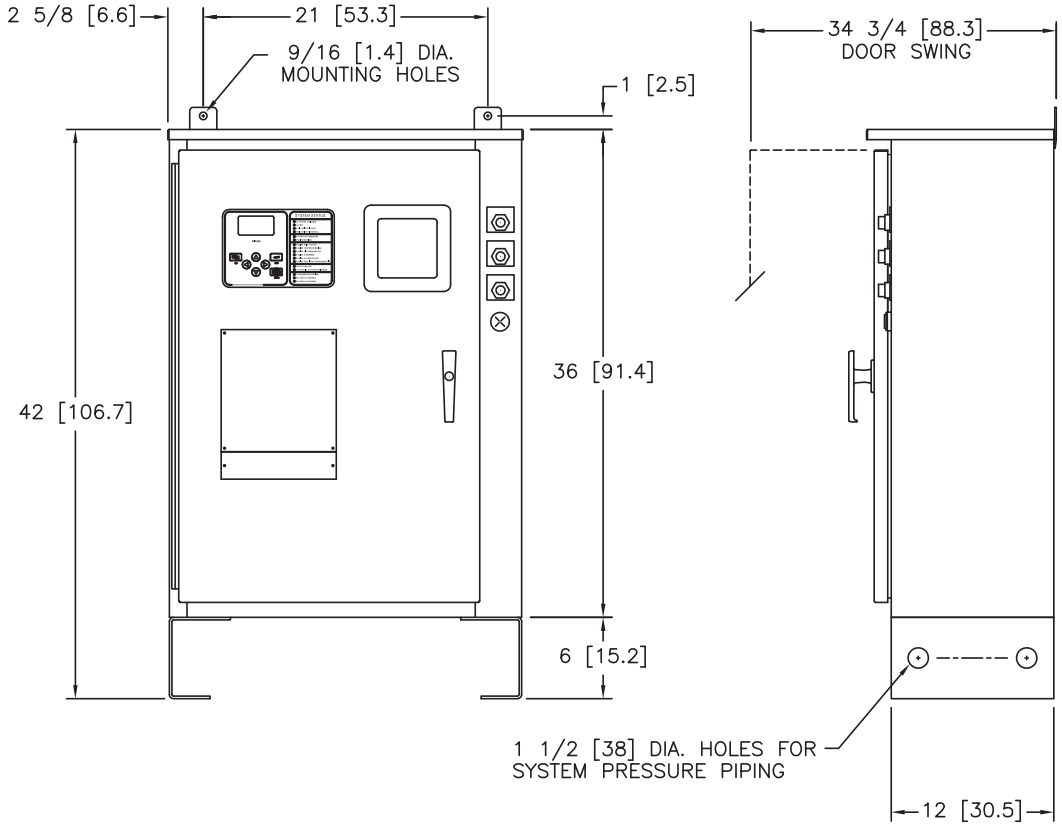

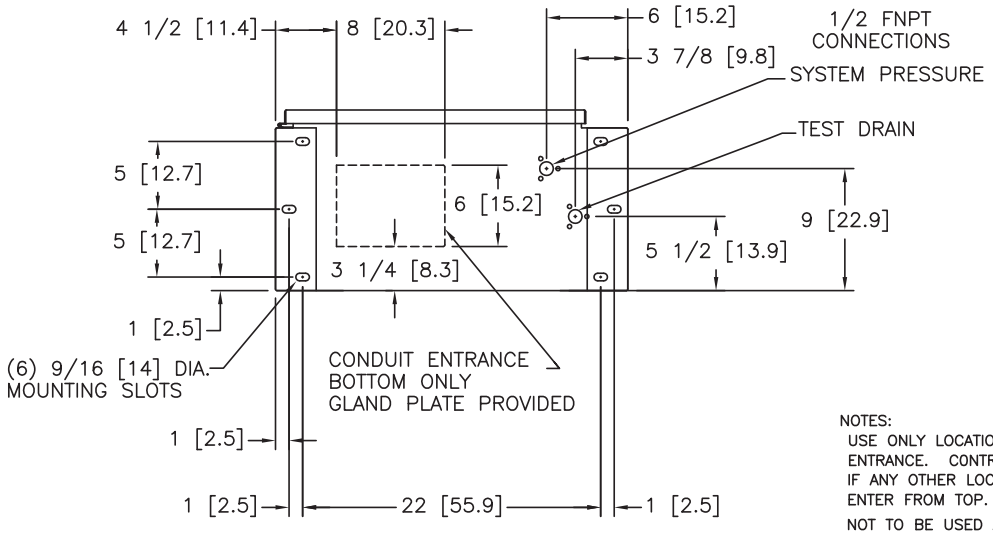

NOTES:

USE ONLY LOCATIONS SHOWN FOR CONDUIT ENTRANCE. CONTROLLER WARRANTY IS VOID IF ANY OTHER LOCATION IS USED. DO NOT ENTER FROM TOP.

NOT TO BE USED AS A JUNCTION BOX. DO NOT ROUTE ENGINE HEATER WIRING THROUGH CONTROLLER.

DO NOT INSTALL IN AMBIENT TEMPERATURES BELOW 41°F (5°C)

DIMENSIONS SHOWN ON THIS DRAWING ARE APPLICABLE FOR NEMA TYPES 2/3R/4/4X/12

ALL DIMENSIONS – INCHES [CM]
SHIPPING WEIGHT – POUNDS [KG]

APPROXIMATE SHIPPING WEIGHT
200 [90.7]

REVISION DESCRIPTION	REV	ECN NO	BY	APP	DATE
UPDATED TITLE BLOCK	D	280454	JMW	TEF	08-21-19
CHANGED PRESSURE FITTING AND CONDUIT ENTRANCE DIMENSIONS	C	228698	JC	TEF	08-20-10

	SIZE	BY	DATE
THIRD ANGLE PROJECTION	A		
	DRAWN BY	RW	01-17-03
	FINAL APPROVAL	TEF	01-17-03

Firetrol, Inc.

© Firetrol, Inc. Not for construction. Subject to change without notice.

DIMENSIONS & SHIPPING WEIGHT | FTA1100-J

DIESEL ENGINE FIRE PUMP CONTROLLER
WITH MODIFICATION N32 (6" BASE MOUNTING LEGS)

DRAWING NUMBER DD1100-22

DWG REV C | ECN NO 280454 | SHEET 1 OF 1

All rights reserved. The drawing and the information contained or depicted herein are the sole property of Firetrol, Inc. Copies are communicated to the recipient in strict confidence and may not be retransmitted, published, reproduced, copied or used in any manor, including as the basis for the manufacture or sale of any products, without the express prior written consent of Firetrol, Inc.