Dimensions and Shipping Weight

FTA1800

Autotransformer Starting

Mark IIXG Electric Fire Pump Controllers

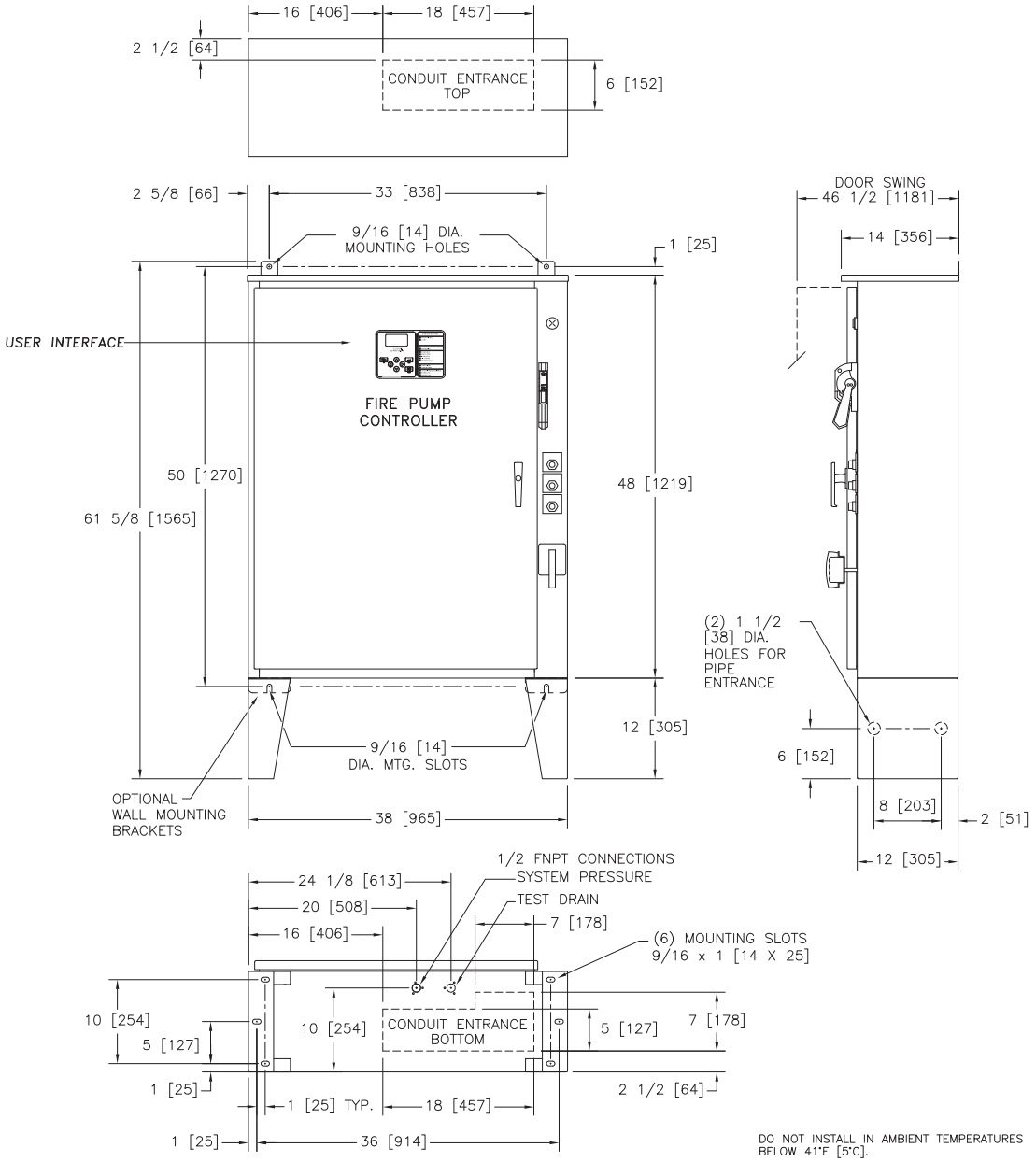

STANDARD WITHSTAND RATINGS 200–600V – 100,000 Amps RMS Sym. INTERMEDIATE WITHSTAND RATINGS 200–600V – 150,000 Amps RMS Sym. HIGH WITHSTAND RATINGS 200–600V – 200,000 Amps RMS Sym.	
LINE VOLTAGE	MOTOR HORSEPOWER
200	☐ 3–60
208	☐ 3–60
220–240	☐ 3–60
380–415	☐ 3–100
440–480	☐ 3–125
550–600	☐ 3–125

APPROXIMATE SHIPPING WEIGHT
415 [188]

DO NOT INSTALL IN AMBIENT TEMPERATURES BELOW 41°F [5°C].

ALL DIMENSIONS – INCHES [MM]
SHIPPING WEIGHT – POUNDS [KG]

THIS DIMENSION DRAWING COVERS FTA1800 CONTROLLERS AT THE HORSEPOWER, VOLTAGE AND WITHSTAND RATINGS AS LISTED IN THE TABLE. FOR OTHER HORSEPOWER OR WITHSTAND RATINGS, REFER TO ED1800–02

SPECIFICATIONS AND DIMENSIONS SUBJECT TO CHANGE WITHOUT NOTICE. DO NOT USE FOR CONSTRUCTION. REQUEST CONSTRUCTION DRAWINGS FROM FIRETROL OR YOUR LOCAL FIRETROL REPRESENTATIVE.

REVISION DESCRIPTION	REV	ECN NO	BY	APP	DATE
UPDATED TITLE BLOCK	D	281195	JMW	TEF	10-03-19
UPDATED MOTOR HORSEPOWER CHART	C	257695	JMW	TEF	03-01-17

	SIZE A	BY	DATE
THIRD ANGLE PROJECTION	DRAWN BY	GFD	07-09-02
	FINAL APPROVAL	GFD	07-09-02

Firetrol, Inc.

© Firetrol, Inc. Not for construction. Subject to change without notice.

DIMENSIONS AND SHIPPING WEIGHT | FTA1800

AUTOTRANSFORMER FIRE PUMP CONTROLLER

DRAWING NUMBER DD1800-52

DWG REV D | ECN NO 281195 | SHEET 1 OF 1

All rights reserved. The drawing and the information contained or depicted herein are the sole property of Firetrol, Inc. Copies are communicated to the recipient in strict confidence and may not be retransmitted, published, reproduced, copied or used in any manor, including as the basis for the manufacture or sale of any products, without the express prior written consent of Firetrol, Inc.