MARK III Electric Fire Pump Controller - Wye-Delta Closed Transition Starting with Power Transfer Switch

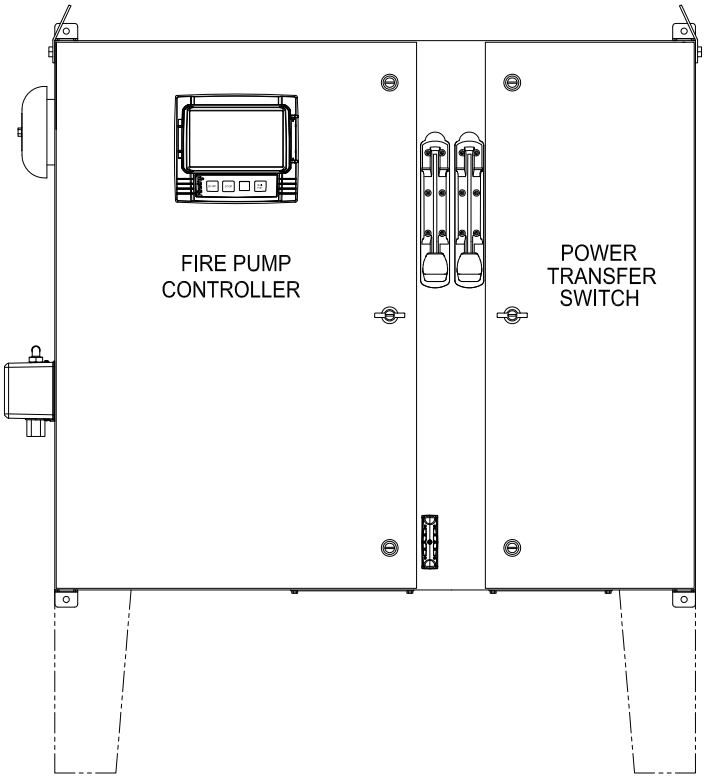

(DRAWINGS INCLUDED IN THIS PACKAGE ARE FOR STANDARD CONTROLLERS. ACTUAL "AS BUILT" DRAWINGS MAY DIFFER FROM THOSE SEEN HERE).

Firetrol, Inc.
3412 Apex Peakway
Apex, North Carolina 27502
P 919 460 5200
F 919 460 5250
www.firetrol.com

While every precaution has been taken to ensure accuracy and completeness herein, Firetrol, Inc. assumes no responsibility, and disclaims all liability, for damages resulting from use of this information or for any errors or omissions. Specifications and drawings are subject to change without notice. ©2019 Firetrol, Inc., All Rights Reserved.

Publication IM1350TSA-60 Rev. B

Dimensional Drawing Lookup Table

FTA1350

MARK III Electric Fire Pump Controllers - Wye-Delta Closed Transition Starting

UNITS WITHOUT POWER TRANSFER SWITCH

	SHORT-CIRCUIT (WITHSTAND) CURRENT RATING (See Chart Below)			
DWG NO	DD1350-70	DD1350-71	DD1350-72	DD1350-73
LINE VOLTAGE	HP RANGE	HP RANGE	HP RANGE	HP RANGE
208	5-30	40-60	75-150	200
220-240	5-30	40-75	100-200	250
380-400-415	5-60	75-125	150-300	350-450
440-480	5-60	75-150	200-450	500
600	5-75	100-200	250-500	N/A

UNITS WITH POWER TRANSFER SWITCH

	SHORT-CIRCUIT (WITHSTAND) CURRENT RATING (See Chart Below)				
DWG NO	DD1350-80	DD1350-81	DD1350-82	DD1350-83	DD1350-84
LINE VOLTAGE	HP RANGE	HP RANGE	HP RANGE	HP RANGE	HP RANGE
208	5-30	40-60	75-100	125-150	200
220-240	5-30	40-75	100-125	150-200	250
380-400-415	5-60	75-125	150-200	250-300	350-450
440-480	5-60	75-150	200-250	300-400	450-500
600	5-75	100-200	250-350	400-500	N/A

MARK III SCCR SELECTION FTA1000, 1250, 1300, 1350, 1800, 1930									
SCCR CODE	200-208V 5-150HP	220-240V 5-200HP	380-415V 5-350HP	440-480V 5-400HP	550-600V 5-500HP	200-208V 200HP	220-240V 250-400HP	380-415V 400-500HP	440-480V 450-500HP
M Standard	100kA	100kA	100kA	100kA	N/A	50kA	50kA	50kA	50kA
N Intermediate	150kA	150kA	150kA	150kA	N/A	N/A	N/A	N/A	N/A
P High	200kA	200kA	200kA	200kA	N/A	100kA	100kA	100kA	100kA
Q Intermediate	N/A	N/A	N/A	N/A	100kA	N/A	N/A	N/A	N/A
R Standard	N/A	N/A	N/A	N/A	50kA	N/A	N/A	N/A	N/A

Consult Factory for Voltages or Horsepowers Not Shown

				REVISED VOLTAGE/POWER CHART	B	-	JMW	CIR	1-21-21
				REVISION DESCRIPTION	REV	ECN NO	BY	APP	DATE
THIRD ANGLE PROJECTION	SIZE A	BY	DATE	LOOKUP TABLE FTA1350	DRAWING NUMBER ED1350-10				
	DRAWN BY	JMW	12-16-19	DIMENSIONAL DRAWING LOOKUP TABLE, CLOSED TRANSITION WYE-DELTA FIRE PUMP CONTROLLERS WITH HP/VOLTAGE/WITHSTAND RATING	DWG REV B	ECN NO -		SHEET 1 OF 1	
	FINAL APPROVAL	CIR	12-16-19						

Firetrol, Inc.

© Firetrol, Inc. Not for construction. Subject to change without notice.

All rights reserved. The drawing and the information contained or depicted herein are the sole property of Firetrol, Inc. Copies are communicated to the recipient in strict confidence and may not be retransmitted, published, reproduced, copied or used in any manner, including as the basis for the manufacture or sale of any products, without the express prior written consent of Firetrol, Inc.

Dimensions and Shipping Weight

FTA1350/950

MARK III Electric Fire Pump Controllers - Wye-Delta Closed Transition Starting With Power Transfer Switch

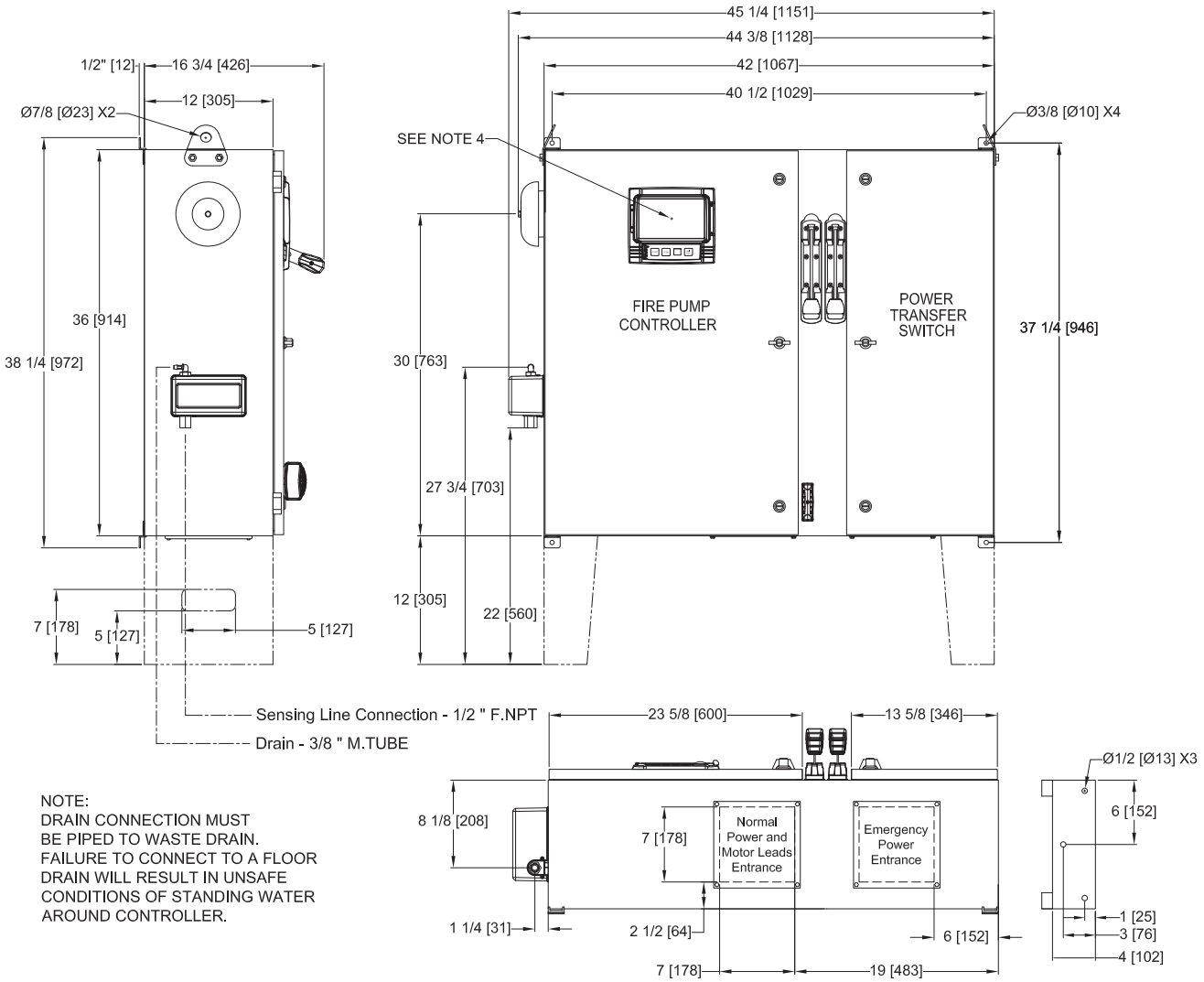

NOTE:
DRAIN CONNECTION MUST BE PIPED TO WASTE DRAIN. FAILURE TO CONNECT TO A FLOOR DRAIN WILL RESULT IN UNSAFE CONDITIONS OF STANDING WATER AROUND CONTROLLER.

VOLTAGE/POWER TABLE	
LINE VOLTAGE	MOTOR HORSEPOWER
208	5-30
220-240	5-30
380-400-415	5-60
440-480	5-60
600	5-75
APPROX SHIPPING WT: 345 [156]	

NOTES:
1. STANDARD: NEMA 2
2. STANDARD PAINT: TEXTURED RED RAL3002
3. ALL DIMENSIONS IN INCHES [MILLIMETERS] SHIPPING WEIGHT IN POUNDS [KG]
4. CENTER OF MARK III SCREEN: 29 5/8 [751] FROM BOTTOM OF ENCLOSURE (NO FEET)
5. BOTTOM CONDUIT ENTRANCE THROUGH REMOVABLE GLAND PLATE RECOMMENDED
6. USE WATERTIGHT CONDUIT AND CONNECTOR ONLY
7. PROTECT EQUIPMENT AGAINST DRILLING CHIPS
8. DOOR SWING EQUAL TO DOOR WIDTH
9. DRAWINGS FOR CONSTRUCTION PURPOSES MUST BE OBTAINED FROM FIRETROL OR THE LOCAL FIRETROL REPRESENTATIVE
10. SEISMIC MOUNTING TO BE RIGID WALL AND BASE ONLY

					RELEASED	-	-	CIR	CIR	11-5-19
					REVISION DESCRIPTION	REV	ECN NO	BY	APP	DATE
THIRD ANGLE PROJECTION	SIZE A	BY	DATE	Firetrol, Inc.	DIMENSIONS AND SHIPPING WEIGT	FTA1350 WITH FTA950	DRAWING NUMBER DD1350-80			CDL
	DRAWN BY	CIR	11-5-19	© Firetrol, Inc. Not for construction. Subject to change without notice.	CLOSED TRANSITION WYE DELTA FIRE PUMP CONTROLLER AND POWER TRANSFER SWITCH		DWG REV -	ECN NO -		SHEET 1 OF 1
	FINAL APPROVAL	CIR	11-5-19							

All rights reserved. The drawing and the information contained or depicted herein are the sole property of Firetrol, Inc. Copies are communicated to the recipient in strict confidence and may not be retransmitted, published, reproduced, copied or used in any manor, including as the basis for the manufacture or sale of any products, without the express prior written consent of Firetrol, Inc.

Dimensions and Shipping Weight

FTA1350/950

MARK III Electric Fire Pump Controllers - Wye-Delta Closed Transition Starting With Power Transfer Switch

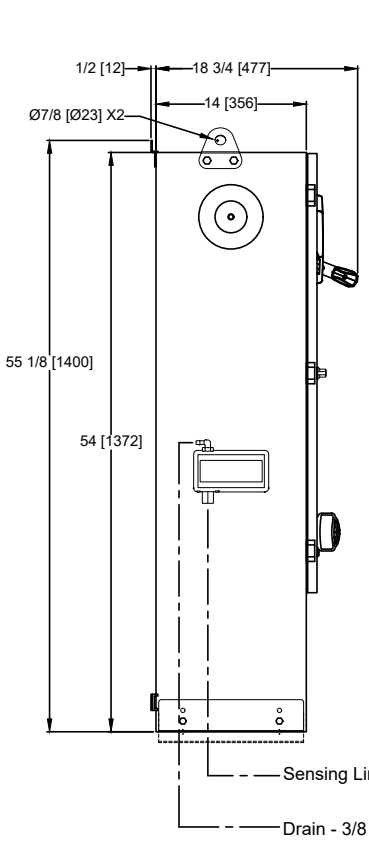

NOTE:
DRAIN CONNECTION MUST BE PIPED TO WASTE DRAIN. FAILURE TO CONNECT TO A FLOOR DRAIN WILL RESULT IN UNSAFE CONDITIONS OF STANDING WATER AROUND CONTROLLER.

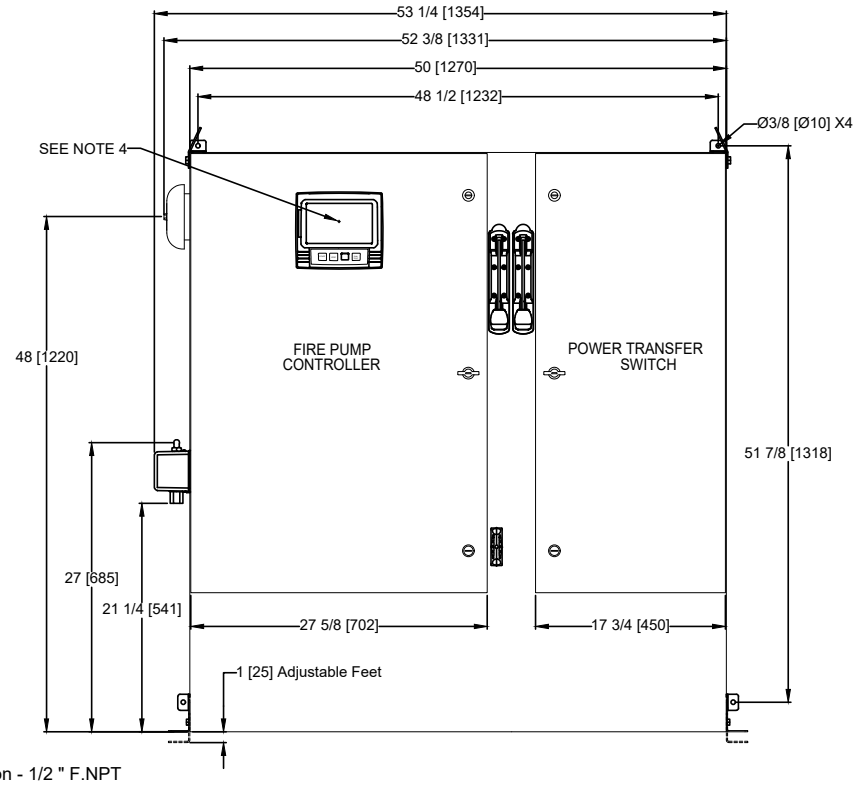

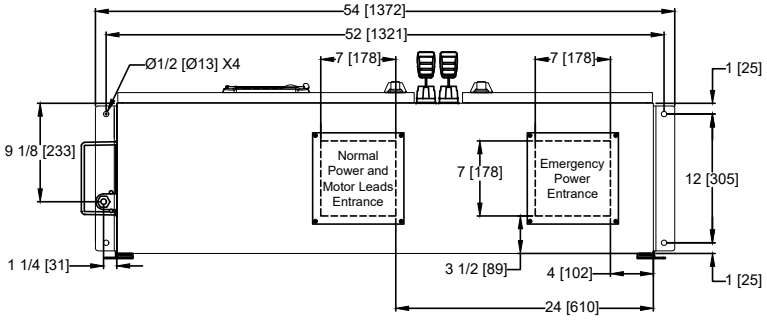

VOLTAGE/POWER TABLE	
LINE VOLTAGE	MOTOR HORSEPOWER
208	40-60
220-240	40-75
380-400-415	75-125
440-480	75-150
600	100-200
APPROX SHIPPING WT: 570 [259]	

NOTES:
1. STANDARD: NEMA 2
2. STANDARD PAINT: TEXTURED RED RAL3002
3. ALL DIMENSIONS IN INCHES [MILLIMETERS] SHIPPING WEIGHT IN POUNDS [KG]
4. CENTER OF MARK III SCREEN: 47 5/8 [1208] FROM BOTTOM OF ENCLOSURE
5. BOTTOM CONDUIT ENTRANCE THROUGH REMOVABLE GLAND PLATE RECOMMENDED
6. USE WATERTIGHT CONDUIT AND CONNECTOR ONLY
7. PROTECT EQUIPMENT AGAINST DRILLING CHIPS
8. DOOR SWING EQUAL TO DOOR WIDTH
9. DRAWINGS FOR CONSTRUCTION PURPOSES MUST BE OBTAINED FROM FIRETROL OR THE LOCAL FIRETROL REPRESENTATIVE
10. SEISMIC MOUNTING TO BE RIGID WALL AND BASE ONLY

				REVISED VOLTAGE/HP CHART	A	-	CIR	CIR	1-21-21
	SIZE A	BY	DATE	REVISION DESCRIPTION	REV	ECN NO	BY	APP	DATE
THIRD ANGLE PROJECTION	DRAWN BY	CIR	11-5-19	DIMENSIONS AND SHIPPING WEIGHT / FTA1350 WITH FTA950	DRAWING NUMBER DD1350-81				CDL
	FINAL APPROVAL	CIR	11-5-19	CLOSED TRANSITION WYE DELTA FIRE PUMP CONTROLLER AND POWER TRANSFER SWITCH	DWG REV A	ECN NO -			SHEET 1 OF 1

Firetrol, Inc.

© Firetrol, Inc. Not for construction. Subject to change without notice.

All rights reserved. The drawing and the information contained or depicted herein are the sole property of Firetrol, Inc. Copies are communicated to the recipient in strict confidence and may not be retransmitted, published, reproduced, copied or used in any manner, including as the basis for the manufacture or sale of any products, without the express prior written consent of Firetrol, Inc.

Dimensions and Shipping Weight

FTA1350/950

MARK III Electric Fire Pump Controllers - Wye-Delta Closed Transition Starting With Power Transfer Switch

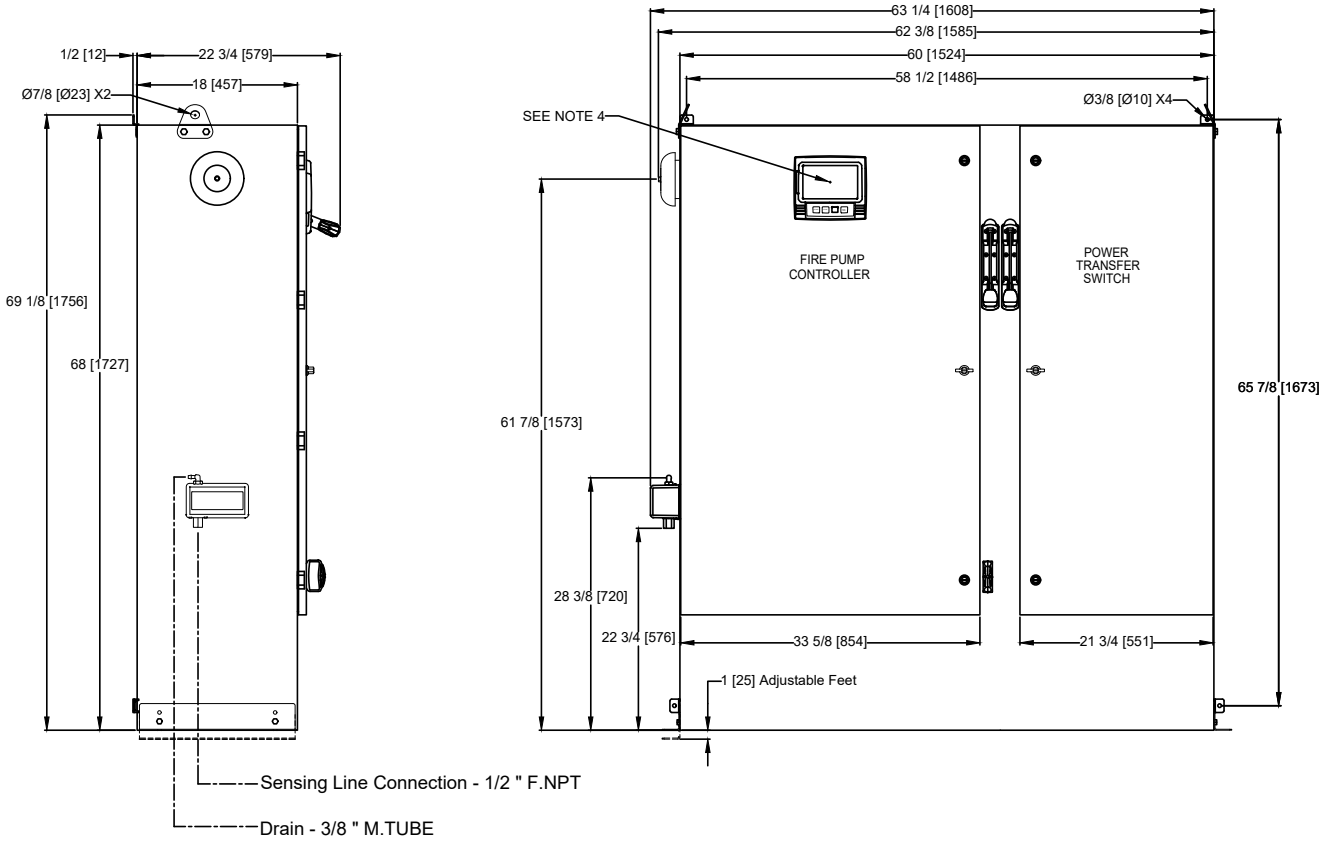

NOTE:
DRAIN CONNECTION MUST BE PIPED TO WASTE DRAIN. FAILURE TO CONNECT TO A FLOOR DRAIN WILL RESULT IN UNSAFE CONDITIONS OF STANDING WATER AROUND CONTROLLER.

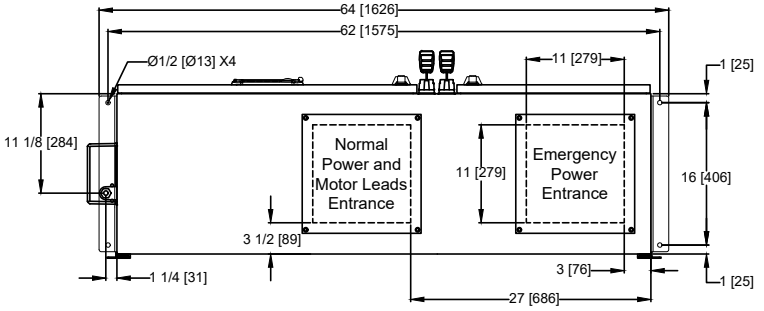

VOLTAGE/POWER TABLE	
LINE VOLTAGE	MOTOR HORSEPOWER
208	75-100
220-240	100-125
380-400-415	150-200
440-480	200-250
600	250-350
APPROX SHIPPING WT: 850 [386]	

NOTES:
1. STANDARD: NEMA 2
2. STANDARD PAINT: TEXTURED RED RAL3002
3. ALL DIMENSIONS IN INCHES [MILLIMETERS] SHIPPING WEIGHT IN POUNDS [KG]
4. CENTER OF MARK III SCREEN: 61 5/8 [1564] FROM BOTTOM OF ENCLOSURE
5. BOTTOM CONDUIT ENTRANCE THROUGH REMOVABLE GLAND PLATE RECOMMENDED
6. USE WATERTIGHT CONDUIT AND CONNECTOR ONLY
7. PROTECT EQUIPMENT AGAINST DRILLING CHIPS
8. DOOR SWING EQUAL TO DOOR WIDTH
9. DRAWINGS FOR CONSTRUCTION PURPOSES MUST BE OBTAINED FROM FIRETROL OR THE LOCAL FIRETROL REPRESENTATIVE
10. SEISMIC MOUNTING TO BE RIGID WALL AND BASE ONLY

	REVISED VOLTAGE/POWER CHART	B	-	CIR	CIR	1-21-21
	REVISION DESCRIPTION	REV	ECN NO	BY	APP	DATE

	SIZE	BY	DATE
THIRD ANGLE PROJECTION	A		
	DRAWN BY	CIR	11-5-19
	FINAL APPROVAL	CIR	11-5-19

Firetrol, Inc.

© Firetrol, Inc. Not for construction. Subject to change without notice.

DIMENSIONS & SHIPPING WEIGHT — FTA1350 WITH FTA950

CLOSED TRANSITION WYE DELTA FIRE PUMP CONTROLLER AND POWER TRANSFER SWITCH

DRAWING NUMBER DD1350-82 CDL

DWG REV B | ECN NO - | SHEET 1 OF 1

All rights reserved. The drawing and the information contained or depicted herein are the sole property of Firetrol, Inc. Copies are communicated to the recipient in strict confidence and may not be retransmitted, published, reproduced, copied or used in any manner, including as the basis for the manufacture or sale of any products, without the express prior written consent of Firetrol, Inc.

Dimensions and Shipping Weight

FTA1350/950

MARK III Electric Fire Pump Controllers - Wye-Delta Closed Transition Starting With Power Transfer Switch

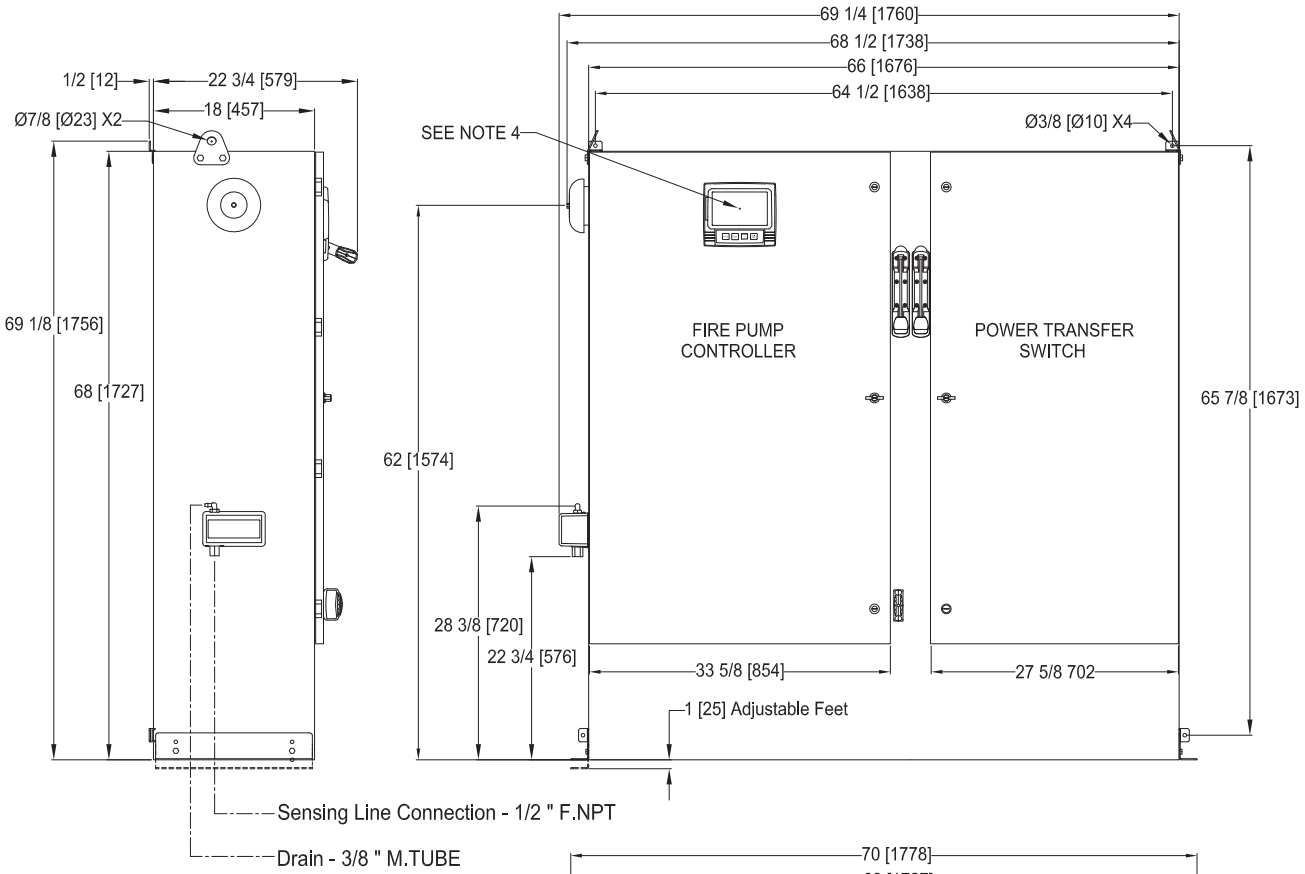

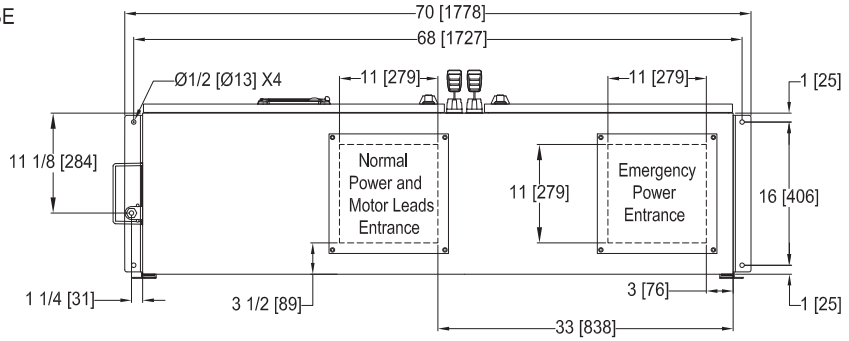

NOTE:
DRAIN CONNECTION MUST BE PIPED TO WASTE DRAIN. FAILURE TO CONNECT TO A FLOOR DRAIN WILL RESULT IN UNSAFE CONDITIONS OF STANDING WATER AROUND CONTROLLER.

VOLTAGE/POWER TABLE	
LINE VOLTAGE	MOTOR HORSEPOWER
208	125-150
220-240	150-200
380-400-415	250-300
440-480	300-400
600	400-500
APPROX SHIPPING WT: 850 [386]	

NOTES:
1. STANDARD: NEMA 2
2. STANDARD PAINT: TEXTURED RED RAL3002
3. ALL DIMENSIONS IN INCHES [MILLIMETERS] SHIPPING WEIGHT IN POUNDS [KG]
4. CENTER OF MARK III SCREEN: 61 5/8 [1564] FROM BOTTOM OF ENCLOSURE
5. BOTTOM CONDUIT ENTRANCE THROUGH REMOVABLE GLAND PLATE RECOMMENDED
6. USE WATERTIGHT CONDUIT AND CONNECTOR ONLY
7. PROTECT EQUIPMENT AGAINST DRILLING CHIPS
8. DOOR SWING EQUAL TO DOOR WIDTH
9. DRAWINGS FOR CONSTRUCTION PURPOSES MUST BE OBTAINED FROM FIRETROL OR THE LOCAL FIRETROL REPRESENTATIVE
10. SEISMIC MOUNTING TO BE RIGID WALL AND BASE ONLY

				REVISED VOLTAGE/POWER CHART		A	-	CIR	CIR	5-12-20
	SIZE A	BY	DATE	REVISION DESCRIPTION		REV	ECN NO	BY	APP	DATE
THIRD ANGLE PROJECTION	DRAWN BY	CIR	11-5-19	DIMENSIONS & SHIPPING WEIGHT	FTA1350 WITH FTA950	DRAWING NUMBER DD1350-83				CDL
	FINAL APPROVAL	CIR	11-5-19	CLOSED TRANSITION WYE DELTA FIRE PUMP CONTROLLER AND POWER TRANSFER SWITCH		DWG REV A	ECN NO -			SHEET 1 OF 1

Firetrol, Inc.

© Firetrol, Inc. Not for construction. Subject to change without notice.

All rights reserved. The drawing and the information contained or depicted herein are the sole property of Firetrol, Inc. Copies are communicated to the recipient in strict confidence and may not be retransmitted, published, reproduced, copied or used in any manner, including as the basis for the manufacture or sale of any products, without the express prior written consent of Firetrol, Inc.

Dimensions and Shipping Weight

FTA1350/950

MARK III Electric Fire Pump Controllers - Wye-Delta Closed Transition Starting With Power Transfer Switch

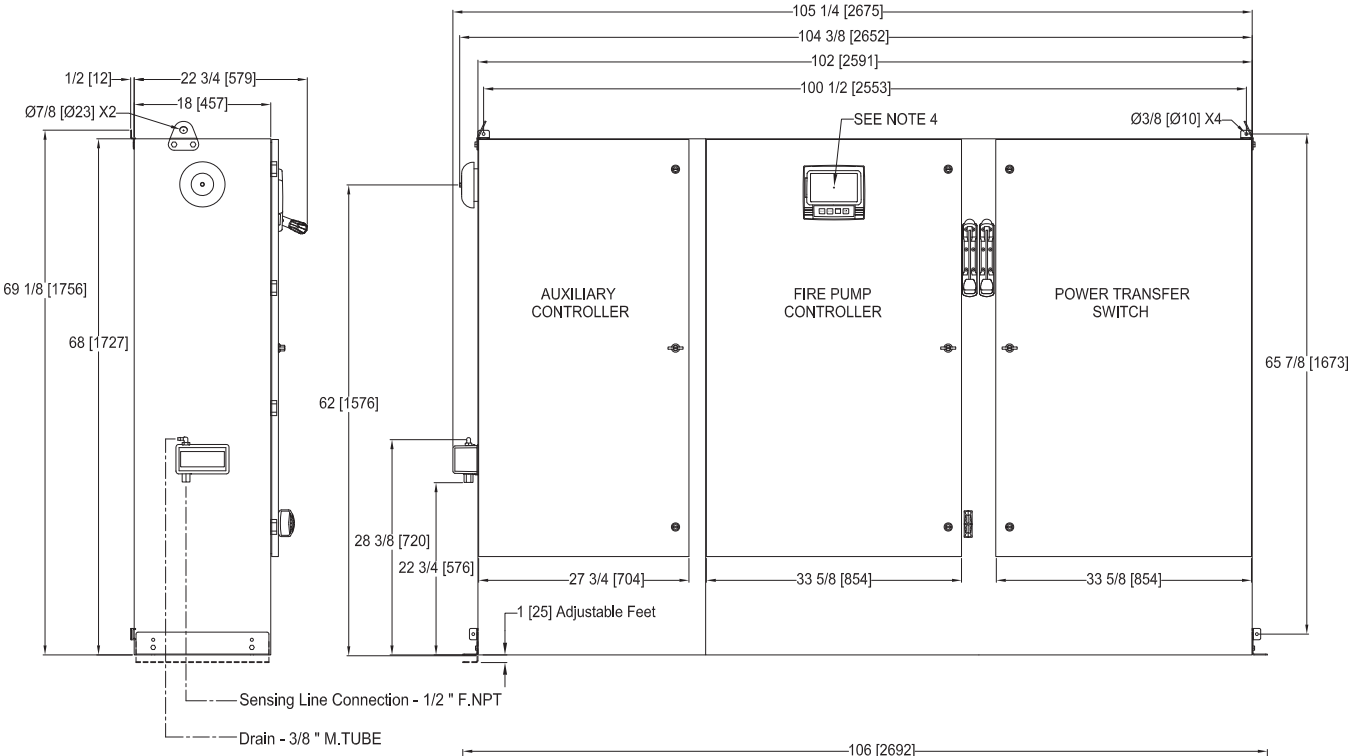

NOTE:
DRAIN CONNECTION MUST BE PIPED TO WASTE DRAIN. FAILURE TO CONNECT TO A FLOOR DRAIN WILL RESULT IN UNSAFE CONDITIONS OF STANDING WATER AROUND CONTROLLER.

VOLTAGE/POWER TABLE	
LINE VOLTAGE	MOTOR HORSEPOWER
208	200
220-240	250
380-400-415	350-450
440-480	450-500
600	NA
APPROX SHIPPING WT: 850 [386]	

NOTES:
1. STANDARD: NEMA 2
2. STANDARD PAINT: TEXTURED RED RAL3002
3. ALL DIMENSIONS IN INCHES [MILLIMETERS] SHIPPING WEIGHT IN POUNDS [KG]
4. CENTER OF MARK III SCREEN: 61 5/8 [1564] FROM BOTTOM OF ENCLOSURE
5. BOTTOM CONDUIT ENTRANCE THROUGH REMOVABLE GLAND PLATE RECOMMENDED
6. USE WATERTIGHT CONDUIT AND CONNECTOR ONLY
7. PROTECT EQUIPMENT AGAINST DRILLING CHIPS
8. DOOR SWING EQUAL TO DOOR WIDTH
9. DRAWINGS FOR CONSTRUCTION PURPOSES MUST BE OBTAINED FROM FIRETROL OR THE LOCAL FIRETROL REPRESENTATIVE
10. SEISMIC MOUNTING TO BE RIGID WALL AND BASE ONLY

				REVISED VOLTAGE/POWER CHART		A	-	CIR	CIR	5-12-20
	SIZE A	BY	DATE	REVISION DESCRIPTION		REV	ECN NO	BY	APP	DATE
THIRD ANGLE PROJECTION	DRAWN BY	CIR	11-5-19	DIMENSIONS & SHIPPING WEIGHT	FTA1350 WITH FTA950	DRAWING NUMBER DD1350-84				CDL
	FINAL APPROVAL	CIR	11-5-19	CLOSED TRANSITION WYE DELTA FIRE PUMP CONTROLLER AND POWER TRANSFER SWITCH		DWG REV A	ECN NO -			SHEET 1 OF 1

Firetrol, Inc.

© Firetrol, Inc. Not for construction. Subject to change without notice.

All rights reserved. The drawing and the information contained or depicted herein are the sole property of Firetrol, Inc. Copies are communicated to the recipient in strict confidence and may not be retransmitted, published, reproduced, copied or used in any manner, including as the basis for the manufacture or sale of any products, without the express prior written consent of Firetrol, Inc.

MARK III Electric Fire Pump Controllers - Wye-Delta Closed Transition Starting With Power Transfer Switch

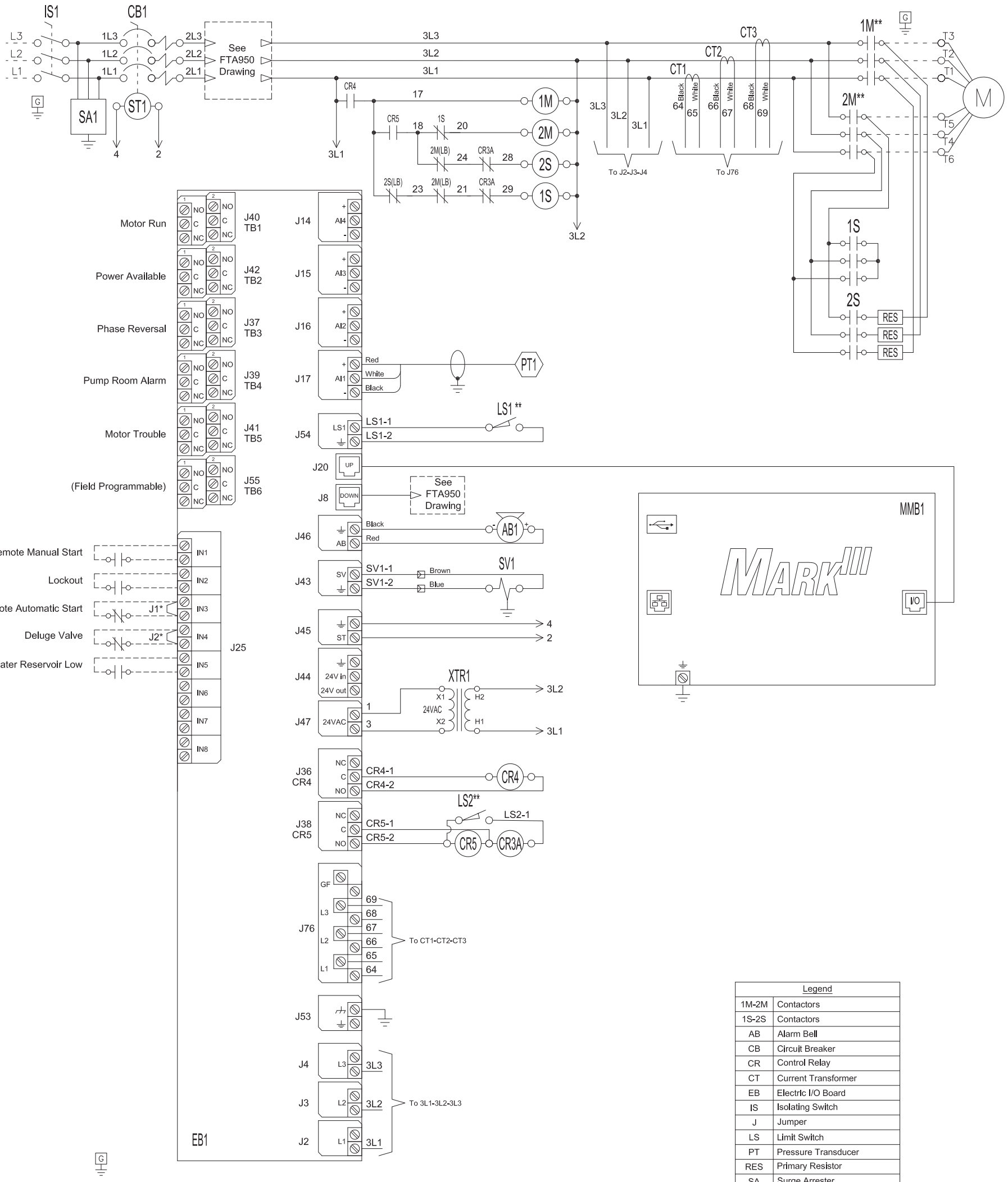

Legend	
1M-2M	Contactors
1S-2S	Contactors
AB	Alarm Bell
CB	Circuit Breaker
CR	Control Relay
CT	Current Transformer
EB	Electric I/O Board
IS	Isolating Switch
J	Jumper
LS	Limit Switch
PT	Pressure Transducer
RES	Primary Resistor
SA	Surge Arrester
ST	Shunt Trip
SV	Solenoid Valve
MMB	Mark III Main Board
XTR	Transformer

* Remove jumper to use this feature
** Contact closes when emergency start is in "ON" position

Drawing for information only.
Manufacturer reserves the right to modify this drawing without notice.
Contact manufacturer for "As Built" drawing.

THIRD ANGLE PROJECTION	SIZE B	BY	DATE	Firetrol, Inc.	REVISION DESCRIPTION		REV	ECN NO	BY	APP	DATE
	DRAWN BY	JMW	12-2-19	© Firetrol, Inc. Not for construction. Subject to change without notice.	WIRING SCHEMATIC	FTA1350 W/FTA950	DRAWING NUMBER WS1350-80 CDL				
	FINAL APPROVAL	CIR	12-2-19		CLOSED TRANSITION WYE DELTA FIRE PUMP CONTROLLER WITH POWER TRANSFER SWITCH		DWG REV -	ECN NO -			SHEET 1 OF 1

All rights reserved. The drawing and the information contained or depicted herein are the sole property of Firetrol, Inc. Copies are communicated to the recipient in strict confidence and may not be retransmitted, published, reproduced, copied or used in any manor, including as the basis for the manufacture or sale of any products, without the express prior written consent of Firetrol, Inc.

Wiring Schematic
380-600V

FTA950

Power Transfer Switch For Use With MARK III Electric Fire Pump Controllers

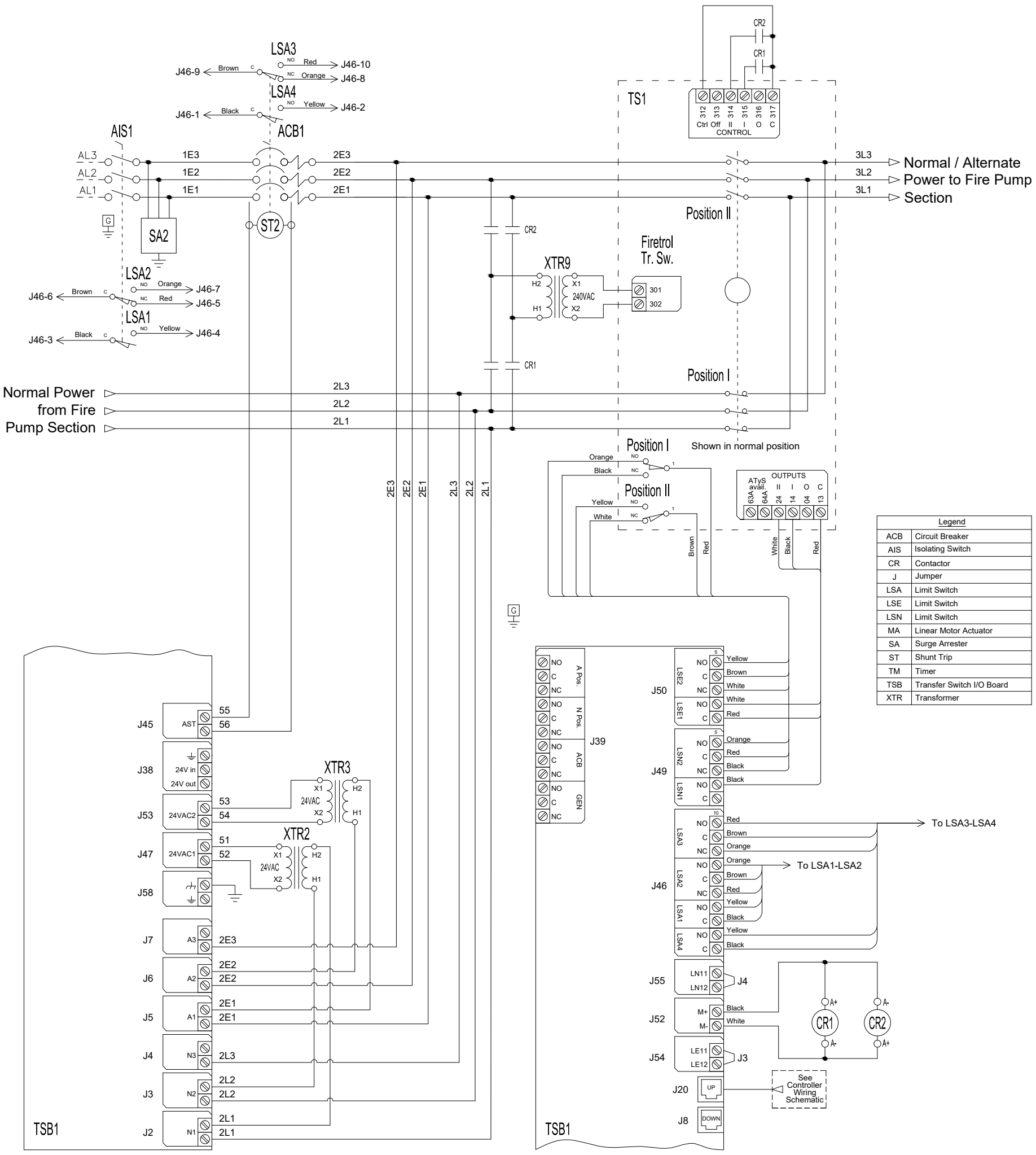

Legend	
ACB	Circuit Breaker
AIS	Isolating Switch
CR	Contactor
J	Jumper
LSA	Limit Switch
LSE	Limit Switch
LSN	Limit Switch
MA	Linear Motor Actuator
SA	Surge Arrester
ST	Shunt Trip
TM	Timer
TSB	Transfer Switch I/O Board
XTR	Transformer

Drawing for information only.
Manufacturer reserves the right to modify this drawing without notice.
Contact manufacturer for "As Built" drawing.

VOLTAGE/POWER TABLE	
LINE VOLTAGE	MOTOR HORSEPOWER
380-415	15-200
440-480	15-250
550-600	15-350

THIRD ANGLE PROJECTION	SIZE B	BY	DATE	Firetrol, Inc.	REVISION DESCRIPTION	REV	ECN NO	BY / APP / DATE
	DRAWN BY	CIR	12-9-19	© Firetrol, Inc. Not for construction. Subject to change without notice.	WIRING SCHEMATIC — FTA950	DRAWING NUMBER WS950-60 CDL		
	FINAL APPROVAL	CIR	12-9-19		FIRE PUMP TRANSFER SWITCH FOR GEN SET AND SECOND UTILITY POWER SOURCE FOR 380-600V	DWG REV -	ECN NO -	SHEET 1 OF 1

All rights reserved. The drawing and the information contained or depicted herein are the sole property of Firetrol, Inc. Copies are communicated to the recipient in strict confidence and may not be retransmitted, published, reproduced, copied or used in any manor, including as the basis for the manufacture or sale of any products, without the express prior written consent of Firetrol, Inc.

Wiring Schematic
380-600V

FTA950

Power Transfer Switch For Use With MARK III Electric Fire Pump Controllers

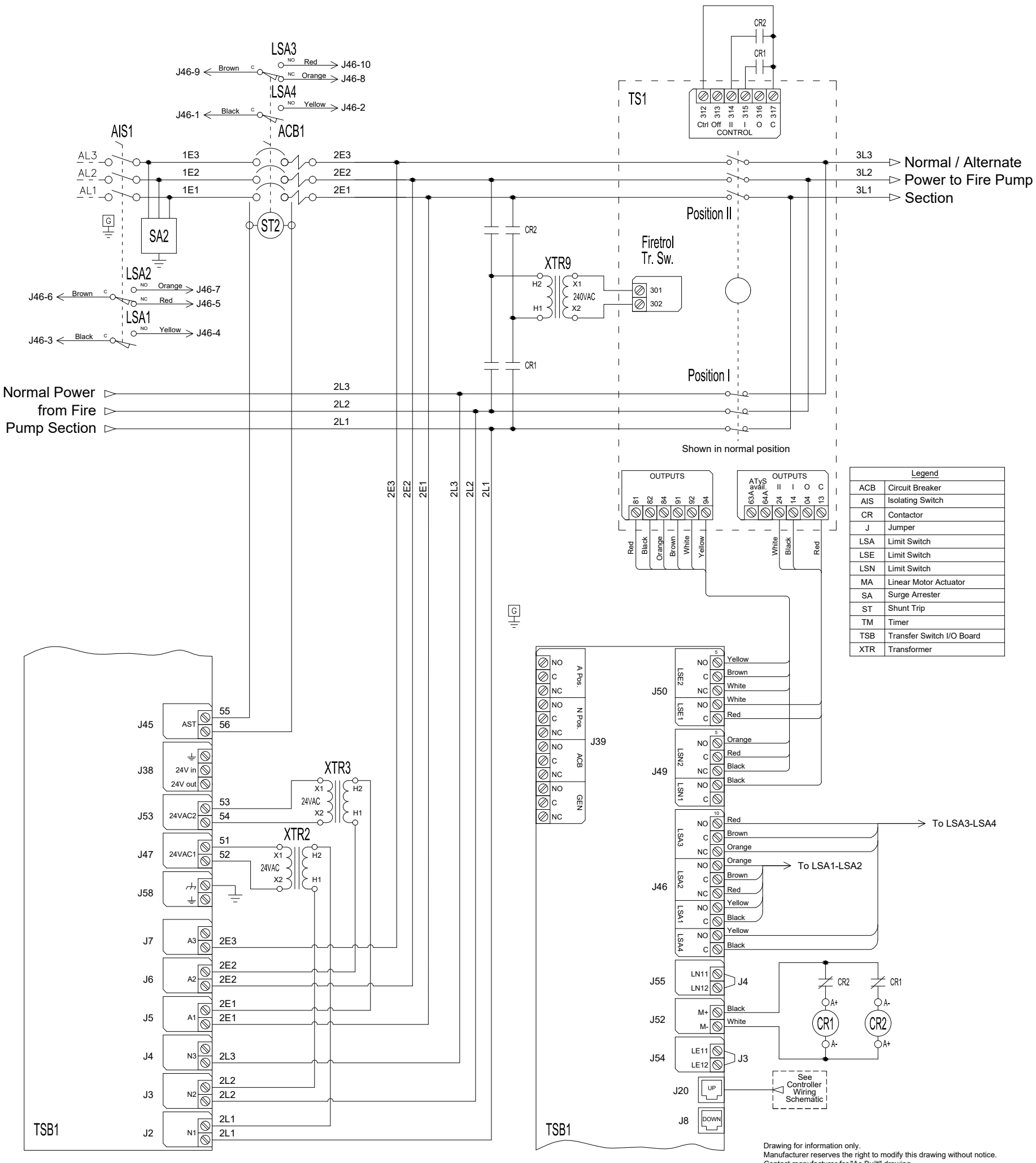

Drawing for information only.
Manufacturer reserves the right to modify this drawing without notice.
Contact manufacturer for "As Built" drawing.

VOLTAGE/POWER TABLE

LINE VOLTAGE	MOTOR HORSEPOWER
380-415	250-400
440-480	300-500
550-600	400-500

THIRD ANGLE PROJECTION	SIZE B	BY	DATE
	DRAWN BY	CIR	12-9-19
	FINAL APPROVAL	CIR	12-9-19

Firetrol, Inc.

© Firetrol, Inc. Not for construction.
Subject to change without notice.

REVISION DESCRIPTION	REV	ECN NO	BY	APP	DATE

WIRING SCHEMATIC | FTA950

FIRE PUMP TRANSFER SWITCH FOR GEN SET AND SECOND UTILITY POWER SOURCE FOR 380-600V

DRAWING NUMBER WS950-61 CDL

DWG REV - | ECN NO - | SHEET 1 OF 1

All rights reserved. The drawing and the information contained or depicted herein are the sole property of Firetrol, Inc. Copies are communicated to the recipient in strict confidence and may not be retransmitted, published, reproduced, copied or used in any manor, including as the basis for the manufacture or sale of any products, without the express prior written consent of Firetrol, Inc.

Wiring Schematic
200-240V

Firetrol

FTA950

Power Transfer Switch For Use With MARK III Electric Fire Pump Controllers

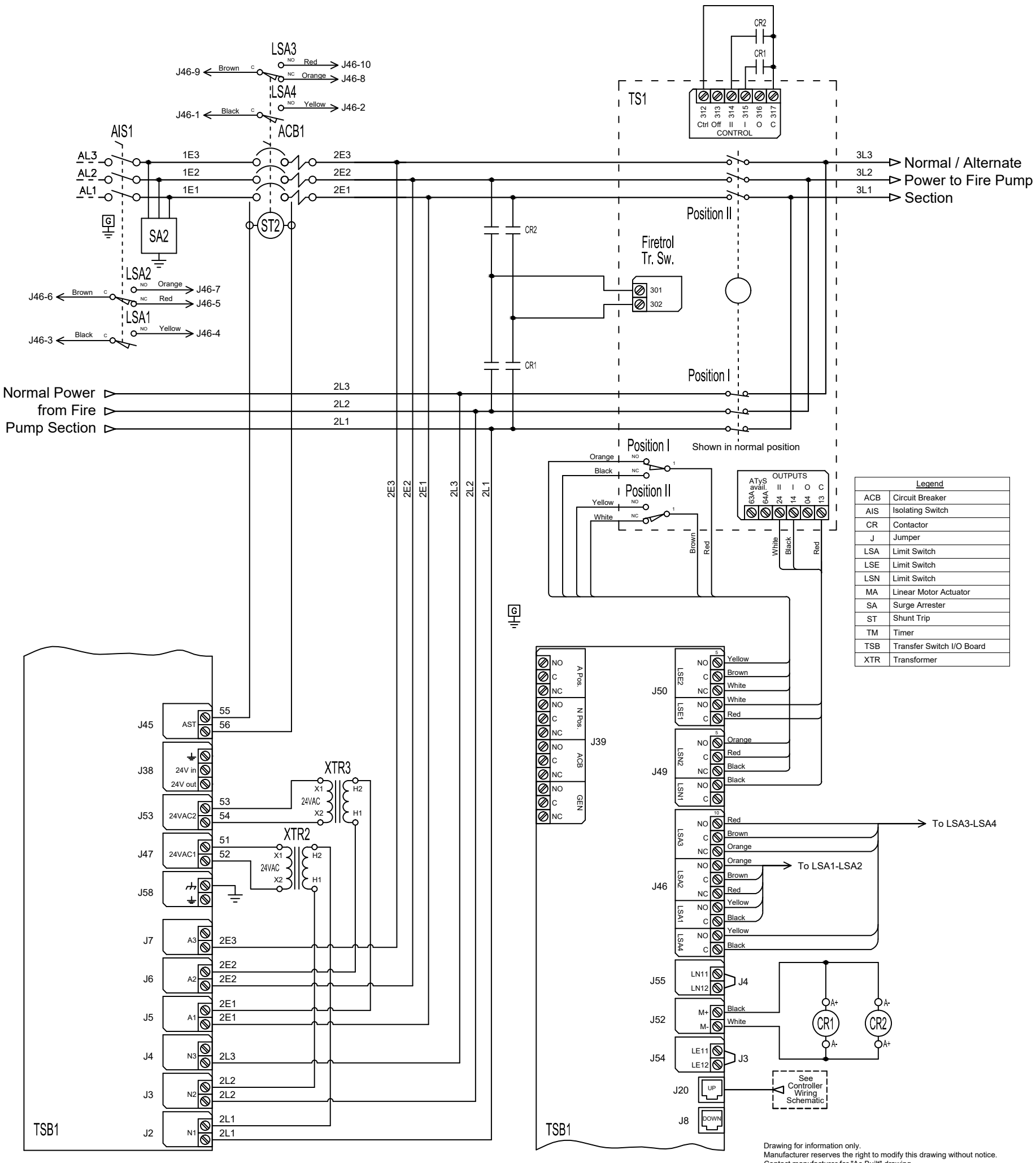

Legend	
ACB	Circuit Breaker
AIS	Isolating Switch
CR	Contactor
J	Jumper
LSA	Limit Switch
LSE	Limit Switch
LSN	Limit Switch
MA	Linear Motor Actuator
SA	Surge Arrester
ST	Shunt Trip
TM	Timer
TSB	Transfer Switch I/O Board
XTR	Transformer

Drawing for information only.
Manufacturer reserves the right to modify this drawing without notice.
Contact manufacturer for "As Built" drawing.

VOLTAGE/POWER TABLE	
LINE VOLTAGE	MOTOR HORSEPOWER
200-208	15-100
220-240	15-125

THIRD ANGLE PROJECTION	SIZE B	BY	DATE	Firetrol, Inc.	REVISION DESCRIPTION		REV	ECN NO	BY / APP / DATE
	DRAWN BY	CIR	12-9-19	© Firetrol, Inc. Not for construction. Subject to change without notice.	WIRING SCHEMATIC	FTA950	DRAWING NUMBER WS950-62 CDL		
	FINAL APPROVAL	CIR	12-9-19		FIRE PUMP TRANSFER SWITCH FOR GEN SET AND SECOND UTILITY POWER SOURCE FOR 200-240v		DWG REV -	ECN NO -	SHEET 1 OF 1

All rights reserved. The drawing and the information contained or depicted herein are the sole property of Firetrol, Inc. Copies are communicated to the recipient in strict confidence and may not be retransmitted, published, reproduced, copied or used in any manor, including as the basis for the manufacture or sale of any products, without the express prior written consent of Firetrol, Inc.

Wiring Schematic
200-240V

FTA950

Power Transfer Switch For Use With MARK III Electric Fire Pump Controllers

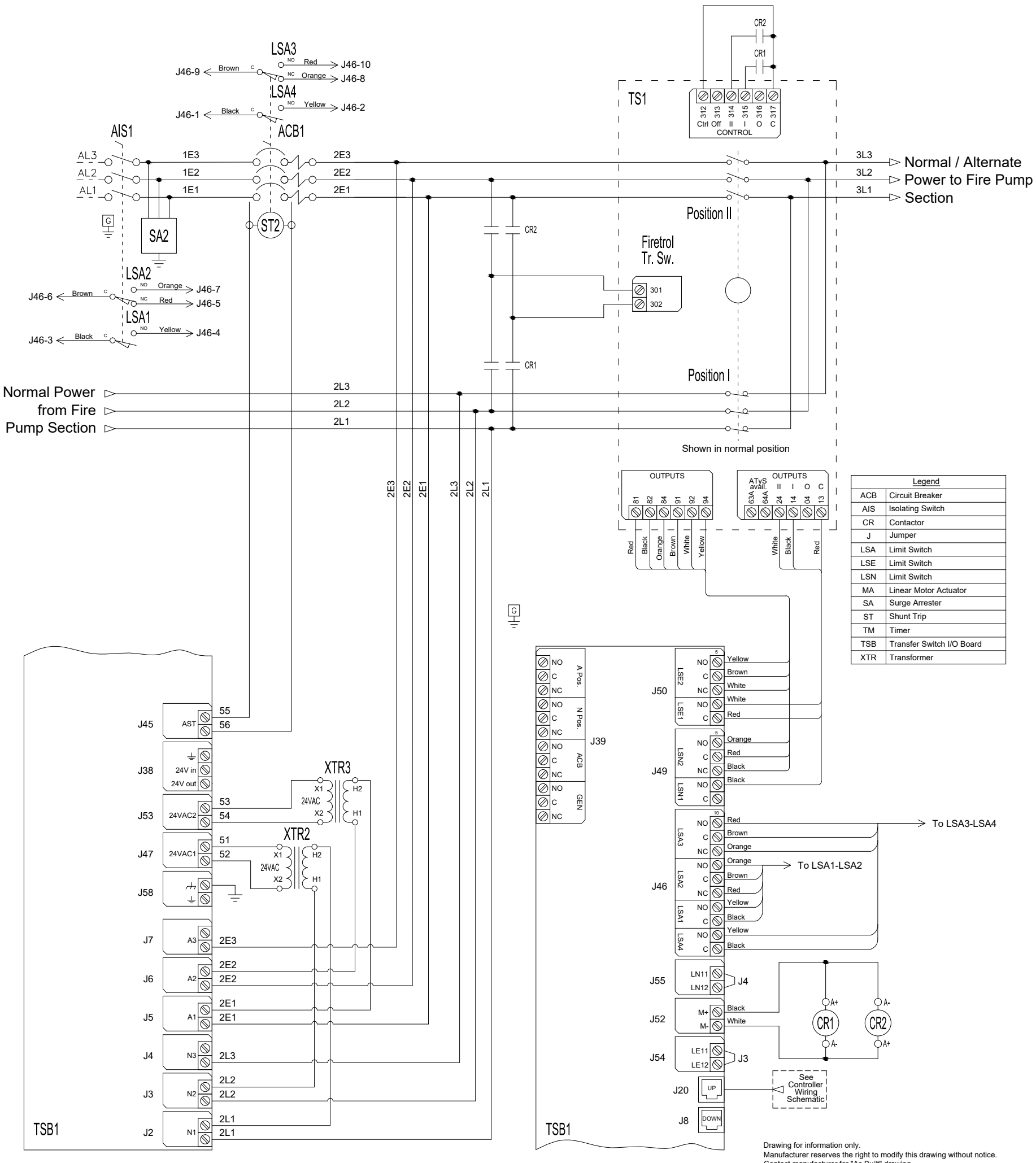

Drawing for information only.
Manufacturer reserves the right to modify this drawing without notice.
Contact manufacturer for "As Built" drawing.

VOLTAGE/POWER TABLE

LINE VOLTAGE	MOTOR HORSEPOWER
200-208	125-250
220-240	150-300

THIRD ANGLE PROJECTION	SIZE B	BY	DATE	Firetrol, Inc.	REVISION DESCRIPTION		REV	ECN NO	BY / APP / DATE
	DRAWN BY	CIR	12-9-19	© Firetrol, Inc. Not for construction. Subject to change without notice.	WIRING SCHEMATIC	FTA950	DRAWING NUMBER WS950-63 CDL		
	FINAL APPROVAL	CIR	12-9-19		FIRE PUMP TRANSFER SWITCH FOR GEN SET AND SECOND UTILITY POWER SOURCE FOR 200-240V		DWG REV -	ECN NO -	SHEET 1 OF 1

All rights reserved. The drawing and the information contained or depicted herein are the sole property of Firetrol, Inc. Copies are communicated to the recipient in strict confidence and may not be retransmitted, published, reproduced, copied or used in any manor, including as the basis for the manufacture or sale of any products, without the express prior written consent of Firetrol, Inc.

Field Connections
Alarm & Control Terminals

FTA1350

MARK III Electric Fire Pump Controllers - Wye-Delta Closed Transition Starting

Control Terminals (EB1)

Terminals Wire Size:
24 - 12 AWG
0.5 Nm

Remote Manual Start	Close to start pump	IN1	J25
Lockout	Close to block start	IN2	J25
Remote Automatic Start	Open to start pump	J1* IN3	J25
Deluge Valve	Open to start pump	J2* IN4	J25

Alarm Inputs (EB1)

Terminals Wire Size:
24 - 12 AWG
0.5 Nm

Water Reservoir Low	Close to signal alarm	IN5	J25

Remote Alarm Terminals (EB1)

Terminals Wire Size:
24 - 12 AWG
0.5 Nm

Motor Run	Normally open Closes to alarm / Normally closed Opens to alarm	J40 TB1
	Normally open Closes to alarm / Normally closed Opens to alarm	
Power Available	Normally open Closes to alarm / Normally closed Opens to alarm	J42 TB2
	Normally open Closes to alarm / Normally closed Opens to alarm	
Phase Reversal	Normally open Closes to alarm / Normally closed Opens to alarm	J37 TB3
	Normally open Closes to alarm / Normally closed Opens to alarm	
Pump Room Alarm **	Normally open Closes to alarm / Normally closed Opens to alarm	J39 TB4
	Normally open Closes to alarm / Normally closed Opens to alarm	
Motor Trouble **	Normally open Closes to alarm / Normally closed Opens to alarm	J41 TB5
	Normally open Closes to alarm / Normally closed Opens to alarm	
(Field Programmable ***)	Normally open Closes to alarm / Normally closed Opens to alarm	J55 TB6
	Normally open Closes to alarm / Normally closed Opens to alarm	

Network Connection (VMB1)

Shielded Female Connector RJ45

Modbus TCP/IP — I/O

* Remove jumper to use this feature
** Re-assignable
*** Not available on FTA1930 models

Drawing for Information only.
Manufacturer reserves the right to modify this drawing without notice.
Contact manufacturer for "As Built" drawing.

				RELEASED	-	-	CIR	CIR	11-11-19
	SIZE A	BY	DATE	REVISION DESCRIPTION	REV	ECN NO	BY	APP	DATE
THIRD ANGLE PROJECTION	DRAWN BY	CIR	11-10-19	FIELD CONNECTIONS / FTA1350	DRAWING NUMBER FC1350-60 CDL				
	FINAL APPROVAL	CIR	11-10-19	CLOSED TRANSITION WYE DELTA FIRE PUMP CONTROLLER	DWG REV -	ECN NO -	SHEET 1 OF 1		

Firetrol, Inc.

© Firetrol, Inc. Not for construction. Subject to change without notice.

All rights reserved. The drawing and the information contained or depicted herein are the sole property of Firetrol, Inc. Copies are communicated to the recipient in strict confidence and may not be retransmitted, published, reproduced, copied or used in any manor, including as the basis for the manufacture or sale of any products, without the express prior written consent of Firetrol, Inc.

Field Connections
Line & Motor Wire Terminal Capacity

FTA1350

MARK III Electric Fire Pump Controllers - Wye-Delta Closed Transition Starting

Line Terminals

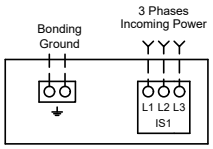

Notes:
1 - For proper wire sizing, refer to NFPA70 and NEC (USA) or CEC (Canada) or local code.
2 - Controller suitable for service entrance in USA.
3 - For more accurate motor connections refer to motor manufacturer or motor nameplate.
4 - Controller is phase sensitive. Incoming lines must be connected in ABC sequence.

COPPER CONDUCTORS for Isolating Switch (IS1).
Field Wiring According to Bending Space (AWG or MCM). Terminals L1 - L2 - L3

Bending Space	5 " (127 mm)							8 " (203 mm)		
HP / Voltage	5	7.5	10	15	20	25	30	40	50	60
208	1x (10 to 1/0)	1x (8 to 1/0)	1x (8 to 1/0)	1x (6 to 1/0)	1x (4 to 1/0)	1x (3 to 1/0)	1x (2 to 1/0)	1x (1/0 to 3/0)	1x (3/0 to 250)	1x (4/0 to 250)
220 to 240	1x (10 to 1/0)	1x (10 to 1/0)	1x (8 to 1/0)	1x (6 to 1/0)	1x (4 to 1/0)	1x (4 to 1/0)	1x (3 to 1/0)	1x (1 to 3/0)	1x (2/0 to 3/0)	1x (3/0 to 250)
380 to 416	1x (10 to 1/0)	1x (10 to 1/0)	1x (10 to 1/0)	1x (8 to 1/0)	1x (8 to 1/0)	1x (6 to 1/0)	1x (6 to 1/0)	1x (4 to 1/0)	1x (3 to 1/0)	1x (3 to 1/0)
440 to 480	1x (10 to 1/0)	1x (10 to 1/0)	1x (10 to 1/0)	1x (10 to 1/0)	1x (8 to 1/0)	1x (8 to 1/0)	1x (6 to 1/0)	1x (6 to 1/0)	1x (4 to 1/0)	1x (3 to 1/0)
600	1x (10 to 1/0)	1x (10 to 1/0)	1x (10 to 1/0)	1x (10 to 1/0)	1x (10 to 1/0)	1x (8 to 1/0)	1x (8 to 1/0)	1x (6 to 1/0)	1x (6 to 1/0)	1x (4 to 1/0)

Bending Space	12 " (305 mm)				16 " (406 mm)						
HP / Voltage	75	100	125	150	200	250	300	350	400	450	500
208	2x (1/0 to 500)	2x (2/0 to 500)	2x (4/0 to 500)	2x (250 to 500)	3x (4/0 to 500)	--------	--------	--------	--------	--------	--------
220 to 240	1x (250)	2x (2/0 to 500)	2x (3/0 to 500)	2x (4/0 to 500)	2x (350 to 500)	3x (250 to 500)	--------	--------	--------	--------	--------
380 to 416	1x (1/0 to 3/0)	1x (3/0 to 250)	1x (250)	2x (1/0 to 500)	2x (3/0 to 500)	2x (4/0 to 500)	2x (300 to 500)	2x (400 to 500)	3x (250 to 500)	3x (300 to 500)	--------
440 to 480	1x (1 to 3/0)	1x (2/0 to 3/0)	1x (3/0 to 250)	1x (4/0 to 250)	2x (1/0 to 500)	2x (3/0 to 500)	2x (4/0 to 500)	2x (300 to 500)	2x (350 to 500)	2x (400 to 500)	3x (250 to 500)
600	1x (3 to 1/0)	1x (1 to 3/0)	1x (2/0 to 3/0)	1x (3/0 to 250)	1x (250)	2x (2/0 to 500)	2x (3/0 to 500)	2x (4/0 to 500)	2x (250 to 500)	2x (300 to 500)	2x (350 to 500)
Bending Space	**5 " (127 mm)**	**8 " (203 mm)**				**12 " (305 mm)**					

Motor Terminals

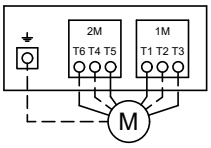

COPPER CONDUCTORS for Motor Connection (1M-2M).
Field Wiring According to Bending Space (AWG or MCM). Terminals T1-T2-T3-T4-T5-T6-T7-T8-T9

HP / Voltage	5	7.5	10	15	20	25	30	40	50	60
208	1x (10 to 4)	1x (10 to 4)	1x (10 to 4)	1x (8 to 4)	1x (8 to 4)	1x (6 to 4)	1x (6 to 4)	1x (4 to 2/0)	1x (2 to 2/0)	1x (1 to 2/0)
220 to 240	1x (10 to 4)	1x (10 to 4)	1x (10 to 4)	1x (8 to 4)	1x (8 to 4)	1x (6 to 4)	1x (6 to 4)	1x (4)	1x (3 to 2/0)	1x (2 to 2/0)
380 to 416	1x (10 to 4)	1x (10 to 4)	1x (10 to 4)	1x (10 to 4)	1x (10 to 4)	1x (10 to 4)	1x (8 to 4)	1x (8 to 4)	1x (6 to 4)	1x (4)
440 to 480	1x (10 to 4)	1x (10 to 4)	1x (10 to 4)	1x (10 to 4)	1x (10 to 4)	1x (10 to 4)	1x (10 to 4)	1x (8 to 4)	1x (8 to 4)	1x (6 to 4)
600	1x (10 to 4)	1x (10 to 4)	1x (10 to 4)	1x (10 to 4)	1x (10 to 4)	1x (10 to 4)	1x (10 to 4)	1x (10 to 4)	1x (8 to 4)	1x (8 to 4)

HP / Voltage	75	100	125	150	200	250	300	350	400	450	500
208	1x (2/0 to 3/0)	1x (3/0 to 300)	1x (250 to 300)	2x (1/0 to 300)	2x (3/0 to 350)	--------	--------	--------	--------	--------	--------
220 to 240	1x (1/0 to 2/0)	1x (3/0)	1x (4/0 to 300)	1x (300)	2x (2/0 to 300)	2x (4/0 to 350)	--------	--------	--------	--------	--------
380 to 416	1x (4 to 2/0)	1x (2 to 2/0)	1x (1/0 to 2/0)	1x (2/0 to 3/0)	1x (4/0 to 300)	1x (300)	2x (2/0 to 300)	2x (3/0 to 300)	2x (4/0 to 350)	2x (4/0 to 350)	--------
440 to 480	1x (4 to 2/0)	1x (3 to 2/0)	1x (2 to 2/0)	1x (1/0 to 3/0)	1x (2/0 to 3/0)	1x (4/0 to 300)	1x (300)	2x (1/0 to 300)	2x (2/0 to 300)	2x (3/0 to 350)	2x (4/0 to 350)
600	1x (6 to 4)	1x (4)	1x (3 to 2/0)	1x (2 to 2/0)	1x (1/0 to 3/0)	1x (2/0 to 3/0)	1x (4/0 to 300)	1x (250 to 300)	1x (300)	2x (1/0 to 300)	2x (2/0 to 300)

					RELEASED	-	-	CIR	CIR	11-11-19
					REVISION DESCRIPTION	REV	ECN NO	BY	APP	DATE
THIRD ANGLE PROJECTION	SIZE A	BY	DATE	Firetrol, Inc.	FIELD CONNECTIONS / FTA1350	DRAWING NUMBER FC1350-61 CDL				
	DRAWN BY	CIR	11-10-19	© Firetrol, Inc. Not for construction. Subject to change without notice.	CLOSED TRANSITION WYE DELTA FIRE PUMP CONTROLLER LINE AND MOTOR FIELD WIRE TERMINAL CAPACITY	DWG REV A	ECN NO -	SHEET 1 OF 1		
	FINAL APPROVAL	CIR	11-10-19							

All rights reserved. The drawing and the information contained or depicted herein are the sole property of Firetrol, Inc. Copies are communicated to the recipient in strict confidence and may not be retransmitted, published, reproduced, copied or used in any manner, including as the basis for the manufacture or sale of any products, without the express prior written consent of Firetrol, Inc.

Field Connections

FTA950

Power Transfer Switch For Use With MARK III Electric Fire Pump Controllers

Power Terminals

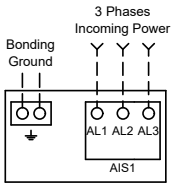

Notes:
1 - Controller is phase sensitive. Incoming lines must be connected in ABC sequence.

COPPER CONDUCTORS for Isolating Switch (AIS1).
Field Wiring According to Bending Space (AWG or MCM). Terminals AL1 - AL2 - AL3

Bending Space	5 " (127 mm)							8 " (203 mm)		
HP / Voltage	5	7.5	10	15	20	25	30	40	50	60
208	1x (10 to 1/0)	1x (8 to 1/0)	1x (8 to 1/0)	1x (6 to 1/0)	1x (4 to 1/0)	1x (3 to 1/0)	1x (2 to 1/0)	1x (1/0 to 3/0)	1x (3/0 to 250)	1x (4/0 to 250)
220 to 240	1x (10 to 1/0)	1x (10 to 1/0)	1x (8 to 1/0)	1x (6 to 1/0)	1x (4 to 1/0)	1x (4 to 1/0)	1x (3 to 1/0)	1x (1 to 3/0)	1x (2/0 to 3/0)	1x (3/0 to 250)
380 to 416	1x (10 to 1/0)	1x (10 to 1/0)	1x (10 to 1/0)	1x (8 to 1/0)	1x (8 to 1/0)	1x (6 to 1/0)	1x (6 to 1/0)	1x (4 to 1/0)	1x (3 to 1/0)	1x (3 to 1/0)
440 to 480	1x (10 to 1/0)	1x (10 to 1/0)	1x (10 to 1/0)	1x (10 to 1/0)	1x (8 to 1/0)	1x (8 to 1/0)	1x (6 to 1/0)	1x (6 to 1/0)	1x (4 to 1/0)	1x (3 to 1/0)
600	1x (10 to 1/0)	1x (10 to 1/0)	1x (10 to 1/0)	1x (10 to 1/0)	1x (10 to 1/0)	1x (8 to 1/0)	1x (8 to 1/0)	1x (6 to 1/0)	1x (6 to 1/0)	1x (4 to 1/0)

Bending Space	12 " (305 mm)				16 " (406 mm)						
HP / Voltage	75	100	125	150	200	250	300	350	400	450	500
208	2x (1/0 to 500)	2x (2/0 to 500)	2x (4/0 to 500)	2x (250 to 500)	3x (4/0 to 500)	--------	--------	--------	--------	--------	--------
220 to 240	1x (250)	2x (2/0 to 500)	2x (3/0 to 500)	2x (4/0 to 500)	2x (350 to 500)	3x (250 to 500)	--------	--------	--------	--------	--------
380 to 416	1x (1/0 to 3/0)	1x (3/0 to 250)	1x (250)	2x (1/0 to 500)	2x (3/0 to 500)	2x (4/0 to 500)	2x (300 to 500)	2x (400 to 500)	3x (250 to 500)	3x (300 to 500)	--------
440 to 480	1x (1 to 3/0)	1x (2/0 to 3/0)	1x (3/0 to 250)	1x (4/0 to 250)	2x (1/0 to 500)	2x (3/0 to 500)	2x (4/0 to 500)	2x (300 to 500)	2x (350 to 500)	2x (400 to 500)	3x (250 to 500)
600	1x (3 to 1/0)	1x (1 to 3/0)	1x (2/0 to 3/0)	1x (3/0 to 250)	1x (250)	2x (2/0 to 500)	2x (3/0 to 500)	2x (4/0 to 500)	2x (250 to 500)	2x (300 to 500)	2x (350 to 500)
Bending Space	5 " (127 mm)	8 " (203 mm)				12 " (305 mm)					

Remote Alarm Terminals (TSB1)

Terminals Wire Size:
24 - 12 AWG
0.5 Nm

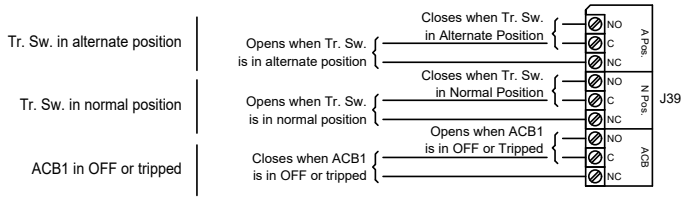

Control Terminals (TSB1)

Terminals Wire Size:
24 - 12 AWG
0.5 Nm

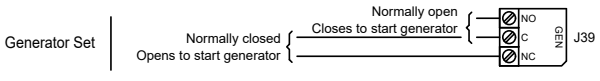

Drawing for information only.
Manufacturer reserves the right to modify this drawing without notice.
Contact manufacturer for "As Built" drawing.

REV	ECN NO	BY	APP	DATE
A	-	CIR	CIR	1-14-21

REVISION DESCRIPTION: REVISED TO AGREE W/CURRENT MANUFACTURING

THIRD ANGLE PROJECTION	SIZE A	BY	DATE
	DRAWN BY	CIR	11-10-19
	FINAL APPROVAL	CIR	11-10-19

Firetrol, Inc.

© Firetrol, Inc. Not for construction.
Subject to change without notice.

FIELD CONNECTIONS | FTA950

POWER TRANSFER SWITCH FOR GENERATOR OR SECOND UTILITY POWER SOURCE

DRAWING NUMBER: FC950-65

DWG REV A | ECN NO - | SHEET 1 OF 1

All rights reserved. The drawing and the information contained or depicted herein are the sole property of Firetrol, Inc. Copies are communicated to the recipient in strict confidence and may not be retransmitted, published, reproduced, copied or used in any manner, including as the basis for the manufacture or sale of any products, without the express prior written consent of Firetrol, Inc.

Typical Motor Connection Diagram

FTA1300 / FTA1350

Mark III Electric Fire Pump Controllers - Wye-Delta Starting (12-Lead Motors)

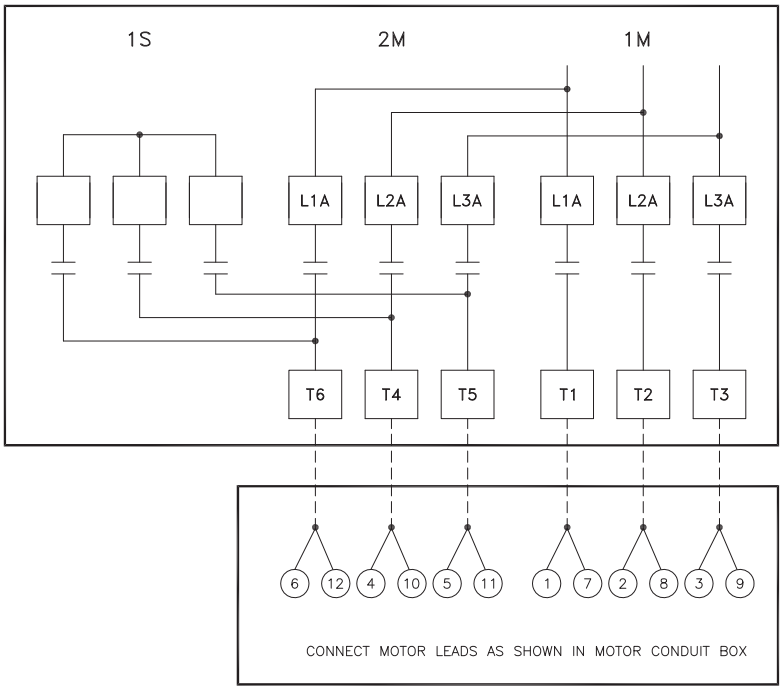

FOR SINGLE VOLTAGE 12-LEAD WYE-DELTA MOTORS

– OR –

FOR DUAL VOLTAGE WYE-DELTA MOTORS CONNECTED TO OPERATE ON THE ***LOWER*** OF THE TWO VOLTAGES 200-208 FOR 200/400V RATED MOTORS OR 220-240 FOR 230/460V RATED MOTORS.

SIX (6) WIRES REQUIRED BETWEEN MOTOR AND CONTROLLER.

IMPORTANT:
THIS DRAWING IS FOR GENERAL INFORMATION ONLY. REFER TO MOTOR CONNECTION DIAGRAM FOR SPECIFIC WIRING ARRANGEMENT.

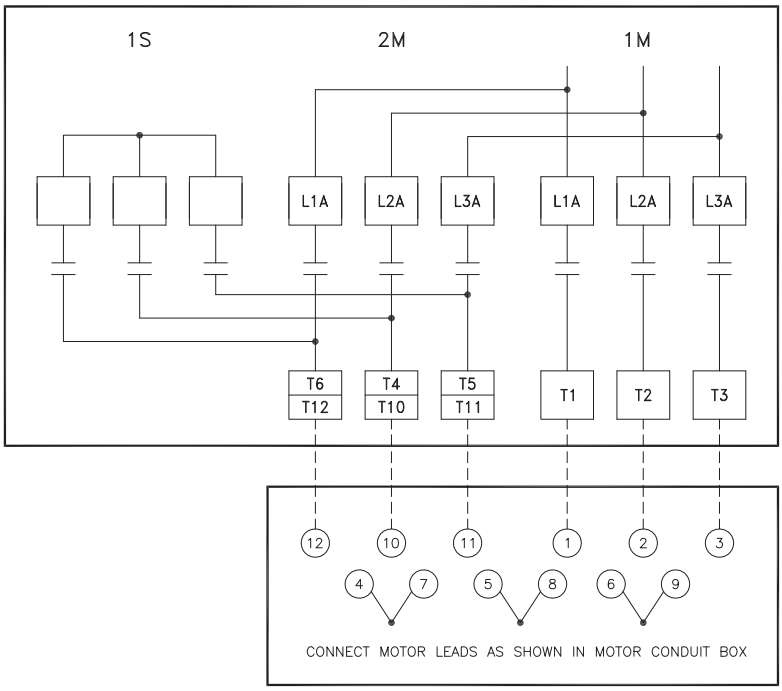

FOR DUAL VOLTAGE WYE-DELTA MOTORS CONNECTED TO OPERATE ON THE ***HIGHER*** OF THE TWO VOLTAGES 440-480 FOR 230/460V RATED MOTORS OR 380-415 FOR 200/400V RATED MOTORS.

SIX (6) WIRES REQUIRED BETWEEN MOTOR AND CONTROLLER.

NOTES:

1. THREE (3) LEAD AND NINE (9) LEAD MOTORS ***CANNOT*** BE USED FOR WYE-DELTA STARTING.
2. TWELVE (12) LEAD PART WINDING MOTORS ***CANNOT*** BE USED FOR WYE-DELTA STARTING AT 240/230V.

REVISION DESCRIPTION	REV	ECN NO	BY	APP	DATE
UPDATED TITLE BLOCK	B	280820	JMW	TEF	09-12-19
ADDED SINGLE VOLTAGE, 12 LEAD, Y-D MOTORS	A	-	TEF	TEF	11-22-00

THIRD ANGLE PROJECTION	SIZE A	BY	DATE
	DRAWN BY	JMW	09-12-95
	FINAL APPROVAL	TEF	09-12-95

Firetrol, Inc.

© Firetrol, Inc. Not for construction. Subject to change without notice.

MOTOR CONNECTIONS | FTA1300 / FTA1350

OPEN/CLOSED TRANSITION WYE-DELTA FIRE PUMP CONTROLLERS

DRAWING NUMBER NS1300-01

DWG REV B | ECN NO 280820 | SHEET 1 OF 1

All rights reserved. The drawing and the information contained or depicted herein are the sole property of Firetrol, Inc. Copies are communicated to the recipient in strict confidence and may not be retransmitted, published, reproduced, copied or used in any manor, including as the basis for the manufacture or sale of any products, without the express prior written consent of Firetrol, Inc.