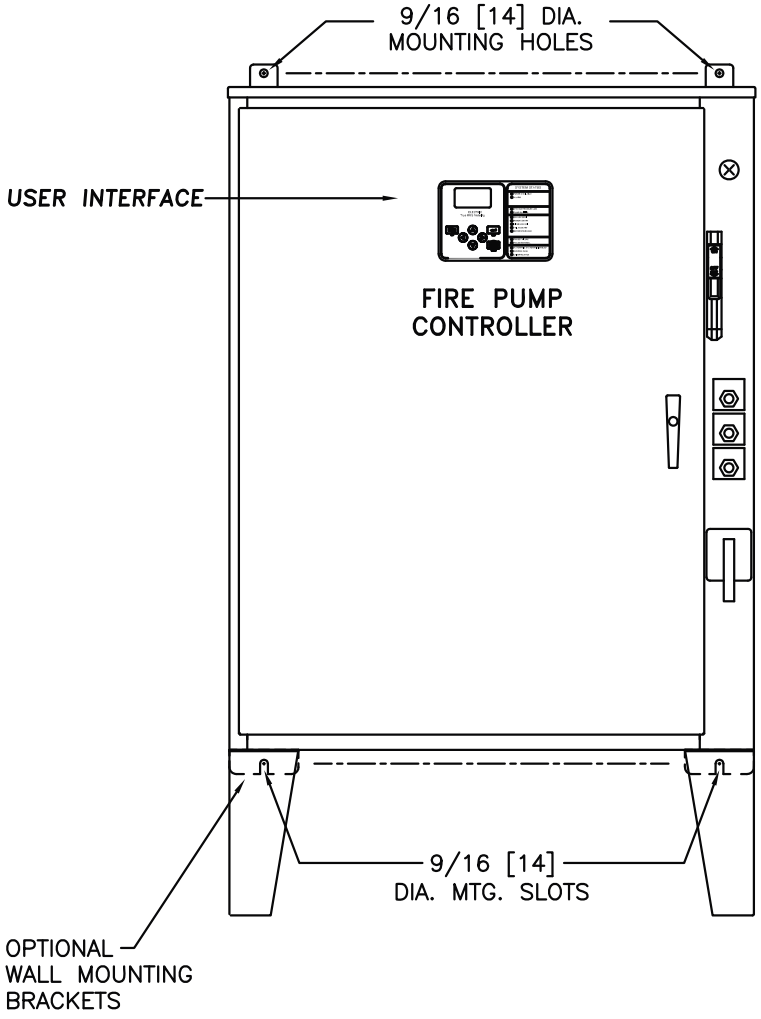

(DRAWINGS INCLUDED IN THIS PACKAGE ARE FOR STANDARD CONTROLLERS. ACTUAL "AS BUILT" DRAWINGS MAY DIFFER FROM THOSE SEEN HERE).

Firetrol, Inc.
3412 Apex Peakway
Apex, North Carolina 27502
P 919 460-5200
F 919 460 5250
www.firetrol.com

While every precaution has been taken to ensure accuracy and completeness herein, Firetrol, Inc. assumes no responsibility, and disclaims all liability, for damages resulting from use of this information or for any errors or omissions. Specifications and drawings are subject to change without notice. ©2019 Firetrol, Inc., All Rights Reserved.

Publication IM1500 Rev. K

Firetrol

Mark IIXG Electric Fire Pump Controllers

Dimensional Drawing Lookup Table
FTA1500
Primary Resistor Starting

UNITS WITHOUT POWER TRANSFER SWITCH

	SHORT-CIRCUIT (WITHSTAND) CURRENT RATING						
	42,000 Amps RMS Sym. Maximum	65,000 Amps RMS Sym. Maximum	200,000 Amps RMS Sym. Maximum				
DRG. NO.	DD1500-60	DD1500-60	DD1500-52	DD1500-53	DD1500-56	DD1500-57	DD1500-60
LINE VOLTAGE	H.P. RANGE	H.P. RANGE	H.P. RANGE	H.P. RANGE	H.P. RANGE	H.P. RANGE	H.P. RANGE
200	---	250	3 - 60	---	75 - 100	---	125 - 200
208	---	250	3 - 60	---	75 - 100	125	150 - 200
220 - 240	---	300	3 - 60	---	75 - 100	125	150 - 250
380 - 415	---	400 - 500	3 - 100	---	---	125 - 200	250 - 350
440 - 480	---	600	3 - 100	125 - 150	---	200 - 250	300 - 500
550 - 600	---	---	3 - 100	125 - 150	---	200 - 300	---

UNITS WITH POWER TRANSFER SWITCH

	SHORT-CIRCUIT (WITHSTAND) CURRENT RATING						
	42,000 Amps RMS Sym. Maximum	65,000 Amps RMS Sym. Maximum	200,000 Amps RMS Sym. Maximum				
DRG. NO.	DD1500-66	DD1500-66	DD1500-61	DD1500-62	DD1500-63	DD1500-64	DD1500-66
LINE VOLTAGE	H.P. RANGE	H.P. RANGE	H.P. RANGE	H.P. RANGE	H.P. RANGE	H.P. RANGE	H.P. RANGE
200	---	250	3 - 60	---	75 - 100	---	125 - 200
208	---	250	3 - 60	---	75 - 100	125	150 - 200
220 - 240	---	300	3 - 60	---	75 - 100	125	150 - 250
380 - 415	---	400 - 500	3 - 100	---	---	125 - 200	250 - 350
440 - 480	---	600	3 - 100	125 - 150	---	200 - 250	300 - 500
550 - 600	---	---	3 - 100	125 - 150	---	200 - 300	---

CONSULT FACTORY FOR VOLTAGES OR HORSEPOWERS NOT SHOWN

REVISION DESCRIPTION	REV	ECN NO	BY	APP	DATE
UPDATED TITLE BLOCK	C	281057	JMW	TEF	10-21-19
SEE ECN	B	237286	TEF	TEF	05-29-12

	SIZE	BY	DATE
THIRD ANGLE PROJECTION	A		
DRAWN BY		JLB	07-12-02
FINAL APPROVAL		TEF	07-12-02

Firetrol, Inc.

© Firetrol, Inc. Not for construction. Subject to change without notice.

LOOKUP TABLE | FTA1500

DIMENSIONAL DRAWING LOOKUP TABLE PRIMARY RESISTANCE FIRE PUMP CONTROLLERS WITH HP/VOLTAGE/WITHSTAND RATING

DRAWING NUMBER ED1500-02

DWG REV C | ECN NO 2810578 | SHEET 1 OF 1

All rights reserved. The drawing and the information contained or depicted herein are the sole property of Firetrol, Inc. Copies are communicated to the recipient in strict confidence and may not be retransmitted, published, reproduced, copied or used in any manor, including as the basis for the manufacture or sale of any products, without the express prior written consent of Firetrol, Inc.

Dimensions and Shipping Weight

FTA1500

Primary Resistor Starting

Mark IIXG Electric Fire Pump Controllers

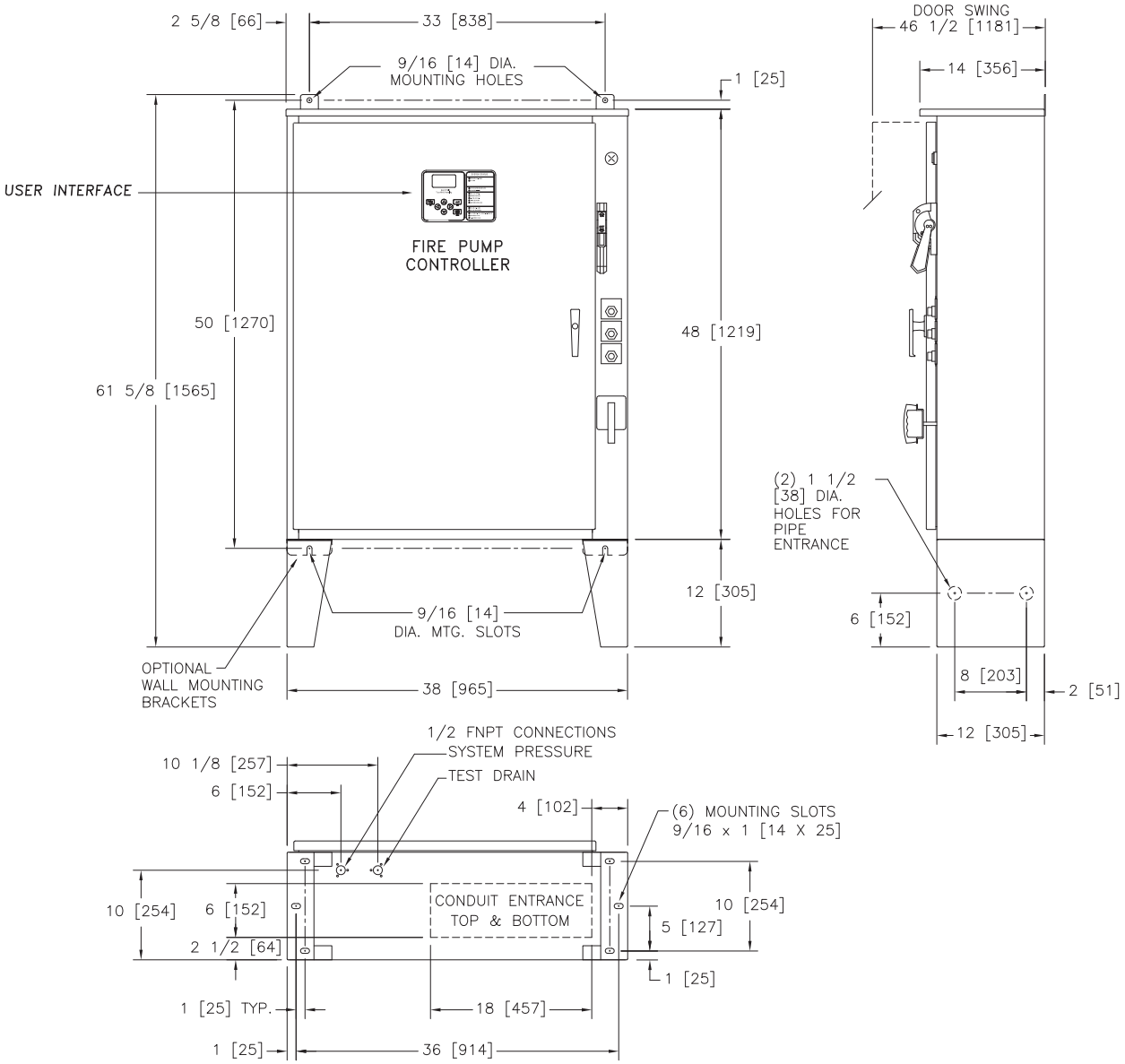

STANDARD WITHSTAND RATINGS 200–600V – 100,000 Amps RMS Sym. INTERMEDIATE WITHSTAND RATINGS 200–600V – 150,000 Amps RMS Sym. HIGH WITHSTAND RATINGS 200–600V – 200,000 Amps RMS Sym.	
LINE VOLTAGE	MOTOR HORSEPOWER
200	☐ 3–60
208	☐ 3–60
220–240	☐ 3–60
380–415	☐ 3–100
440–480	☐ 3–100
550–600	☐ 3–100

APPROXIMATE SHIPPING WEIGHT
340 [154]

DO NOT INSTALL IN AMBIENT TEMPERATURES BELOW 41°F [5°C].

ALL DIMENSIONS – INCHES [MM]
SHIPPING WEIGHT – POUNDS [KG]

THIS DIMENSION DRAWING COVERS FTA1500 CONTROLLERS AT THE HORSEPOWER, VOLTAGE AND WITHSTAND RATINGS AS LISTED IN THE TABLE. FOR OTHER HORSEPOWER OR WITHSTAND RATINGS, REFER TO ED1500–02

SPECIFICATIONS AND DIMENSIONS SUBJECT TO CHANGE WITHOUT NOTICE. DO NOT USE FOR CONSTRUCTION. REQUEST CONSTRUCTION DRAWINGS FROM FIRETROL OR YOUR LOCAL FIRETROL REPRESENTATIVE.

REVISION DESCRIPTION	REV	ECN NO	BY	APP	DATE
UPDATED TITLE BLOCK	C	281057	JMW	TEF	09-25-19
ADDED COMPONENTS TO MEET FM REQUIREMENTS	B	228552	JC	TEF	08-11-10

SIZE	BY	DATE
A		
DRAWN BY	TEF	07-19-02
FINAL APPROVAL	TEF	07-19-02

THIRD ANGLE PROJECTION

Firetrol, Inc.

© Firetrol, Inc. Not for construction. Subject to change without notice.

DIMENSIONS AND SHIPPING WEIGHT | FTA1500

PRIMARY RESISTOR FIRE PUMP CONTROLLER

DRAWING NUMBER DD1500-52

DWG REV C | ECN NO 281057 | SHEET 1 OF 1

All rights reserved. The drawing and the information contained or depicted herein are the sole property of Firetrol, Inc. Copies are communicated to the recipient in strict confidence and may not be retransmitted, published, reproduced, copied or used in any manor, including as the basis for the manufacture or sale of any products, without the express prior written consent of Firetrol, Inc.

Firetrol

Mark IIXG Electric Fire Pump Controllers

Dimensions and Shipping Weight

FTA1500

Primary Resistor Starting

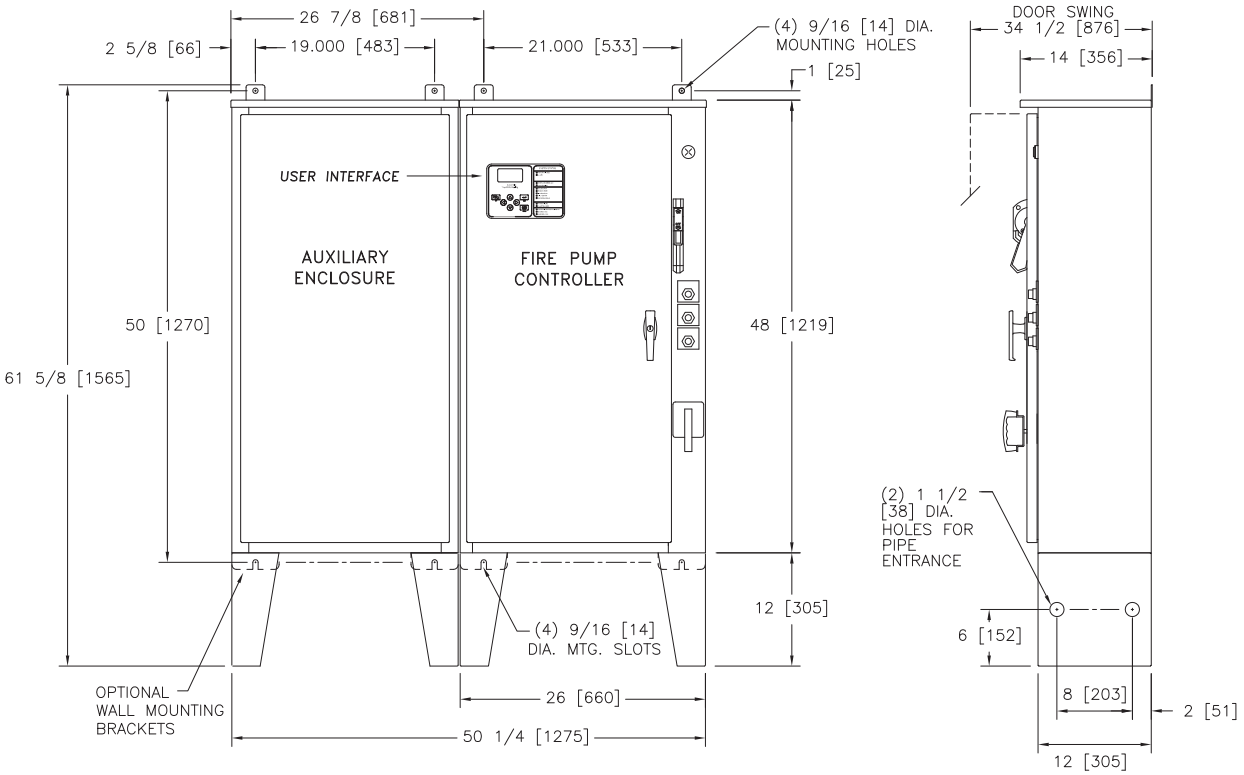

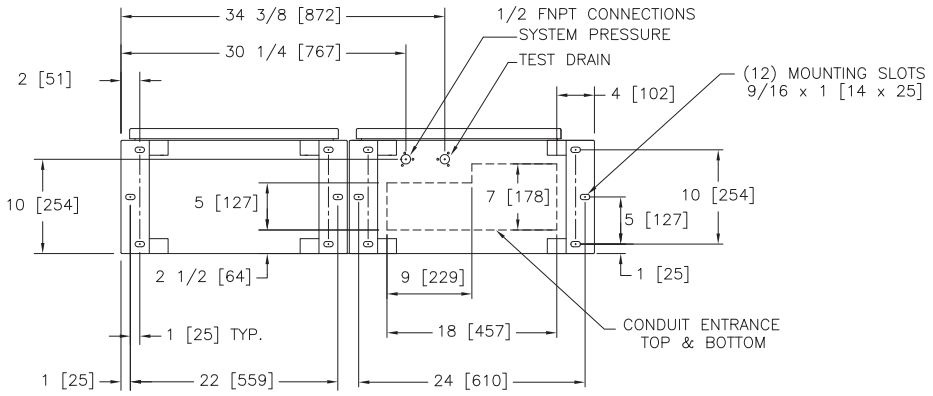

STANDARD WITHSTAND RATINGS 200–600V – 100,000 Amps RMS Sym. INTERMEDIATE WITHSTAND RATINGS 200–600V – 150,000 Amps RMS Sym. HIGH WITHSTAND RATINGS 200–600V – 200,000 Amps RMS Sym.	
LINE VOLTAGE	MOTOR HORSEPOWER
200	☐ ---
208	☐ ---
220–240	☐ ---
380–415	☐ ---
440–480	☐ 125–150
550–600	☐ 125–150

APPROXIMATE SHIPPING WEIGHT
410 [186]

DO NOT INSTALL IN AMBIENT TEMPERATURES BELOW 41°F [5°C].

ALL DIMENSIONS – INCHES [MM]
SHIPPING WEIGHT – POUNDS [KG]

THIS DIMENSION DRAWING COVERS FTA1500 CONTROLLERS AT THE HORSEPOWER, VOLTAGE AND WITHSTAND RATINGS AS LISTED IN THE TABLE. FOR OTHER HORSEPOWER OR WITHSTAND RATINGS, REFER TO ED1500–02

SPECIFICATIONS AND DIMENSIONS SUBJECT TO CHANGE WITHOUT NOTICE. DO NOT USE FOR CONSTRUCTION. REQUEST CONSTRUCTION DRAWINGS FROM FIRETROL OR YOUR LOCAL FIRETROL REPRESENTATIVE.

REVISION DESCRIPTION	REV	ECN NO	BY	APP	DATE
UPDATED TITLE BLOCK	C	281057	JMW	TE	10-01-19
ADDED COMPONENTS TO MEET FM REQUIREMENTS	B	228552	JC	TEF	08-11-10

	SIZE	BY	DATE
THIRD ANGLE PROJECTION	A		
	DRAWN BY	TEF	07-24-02
	FINAL APPROVAL	TEF	07-24-02

Firetrol, Inc.

© Firetrol, Inc. Not for construction. Subject to change without notice.

DIMENSIONS AND SHIPPING WEIGHT | FTA1500

PRIMARY RESISTOR FIRE PUMP CONTROLLER

DRAWING NUMBER DD1500-53

DWG REV C | ECN NO 281057 | SHEET 1 OF 1

All rights reserved. The drawing and the information contained or depicted herein are the sole property of Firetrol, Inc. Copies are communicated to the recipient in strict confidence and may not be retransmitted, published, reproduced, copied or used in any manor, including as the basis for the manufacture or sale of any products, without the express prior written consent of Firetrol, Inc.

Firetrol

Mark IIXG Electric Fire Pump Controllers

Dimensions and Shipping Weight

FTA1500

Primary Resistor Starting

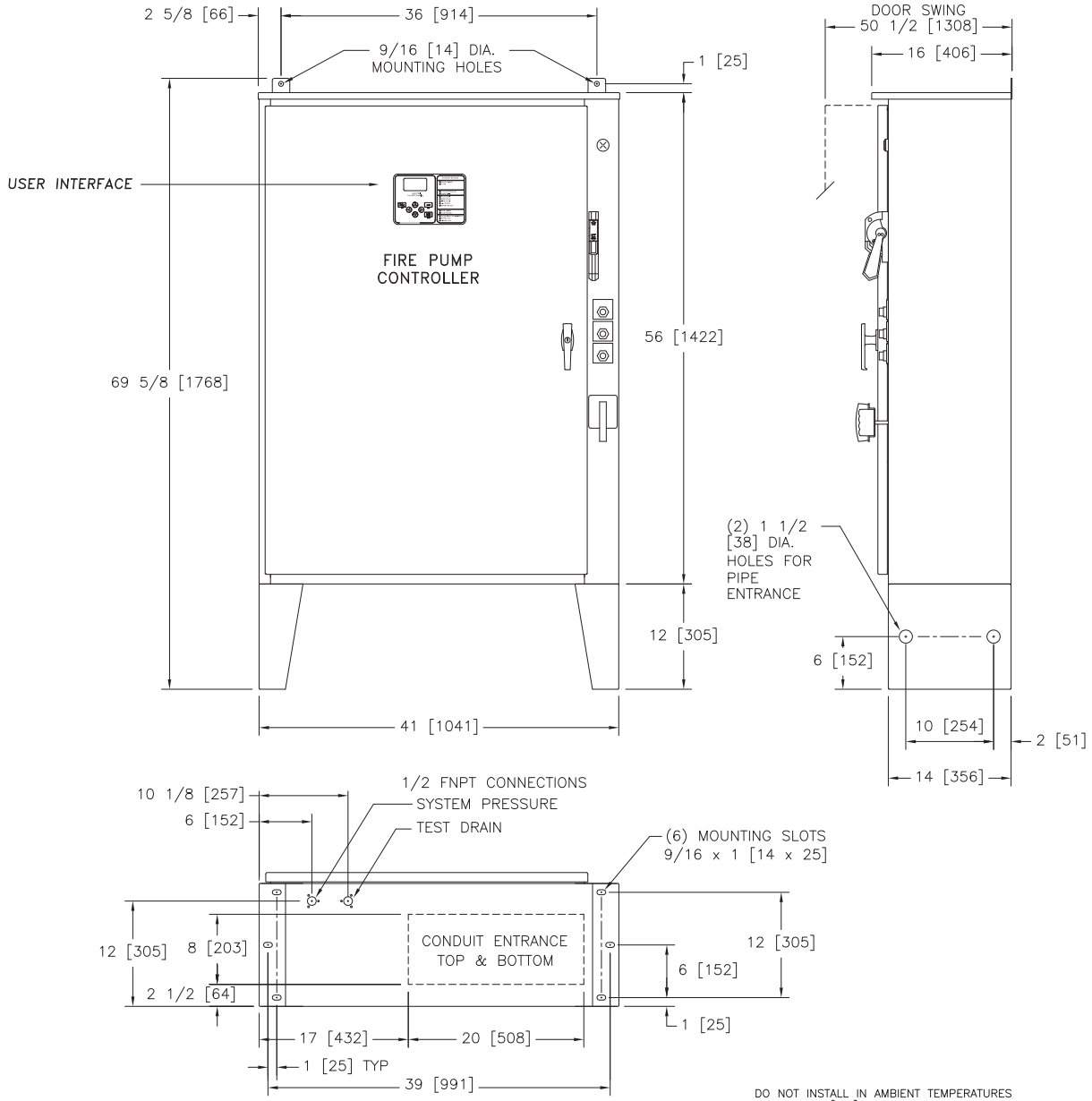

STANDARD WITHSTAND RATINGS 200–600V – 100,000 Amps RMS Sym. INTERMEDIATE WITHSTAND RATINGS 200–600V – 150,000 Amps RMS Sym. HIGH WITHSTAND RATINGS 200–600V – 200,000 Amps RMS Sym.	
LINE VOLTAGE	MOTOR HORSEPOWER
200	☐ 75–100
208	☐ 75–100
220–240	☐ 75–100
380–415	☐ –
440–480	☐ –
550–600	☐ –

APPROXIMATE SHIPPING WEIGHT
395 [179]

DO NOT INSTALL IN AMBIENT TEMPERATURES BELOW 41°F [5°C].

ALL DIMENSIONS – INCHES [MM]
SHIPPING WEIGHT – POUNDS [KG]

THIS DIMENSION DRAWING COVERS FTA1500 CONTROLLERS AT THE HORSEPOWER, VOLTAGE AND WITHSTAND RATINGS AS LISTED IN THE TABLE. FOR OTHER HORSEPOWER OR WITHSTAND RATINGS, REFER TO ED1500–02

SPECIFICATIONS AND DIMENSIONS SUBJECT TO CHANGE WITHOUT NOTICE. DO NOT USE FOR CONSTRUCTION. REQUEST CONSTRUCTION DRAWINGS FROM FIRETROL OR YOUR LOCAL FIRETROL REPRESENTATIVE.

REVISION DESCRIPTION	REV	ECN NO	BY	APP	DATE
UPDATED TITLE BLOCK	C	281057	JMW	TEF	10-02-19
ADDED COMPONENTS TO MEET FM REQUIREMENTS	B	228552	JC	TEF	08-11-10

	SIZE	BY	DATE
THIRD ANGLE PROJECTION	A		
	DRAWN BY	TEF	07-23-02
	FINAL APPROVAL	TEF	07-23-02

Firetrol, Inc.

© Firetrol, Inc. Not for construction. Subject to change without notice.

DIMENSIONS AND SHIPPING WEIGHT FTA1500

PRIMARY RESISTOR FIRE PUMP CONTROLLER

DRAWING NUMBER DD1500-56

DWG REV C | ECN NO 281057 | SHEET 1 OF 1

All rights reserved. The drawing and the information contained or depicted herein are the sole property of Firetrol, Inc. Copies are communicated to the recipient in strict confidence and may not be retransmitted, published, reproduced, copied or used in any manor, including as the basis for the manufacture or sale of any products, without the express prior written consent of Firetrol, Inc.

Dimensions and Shipping Weight

FTA1500

Primary Resistor Starting

Mark IIXG Electric Fire Pump Controllers

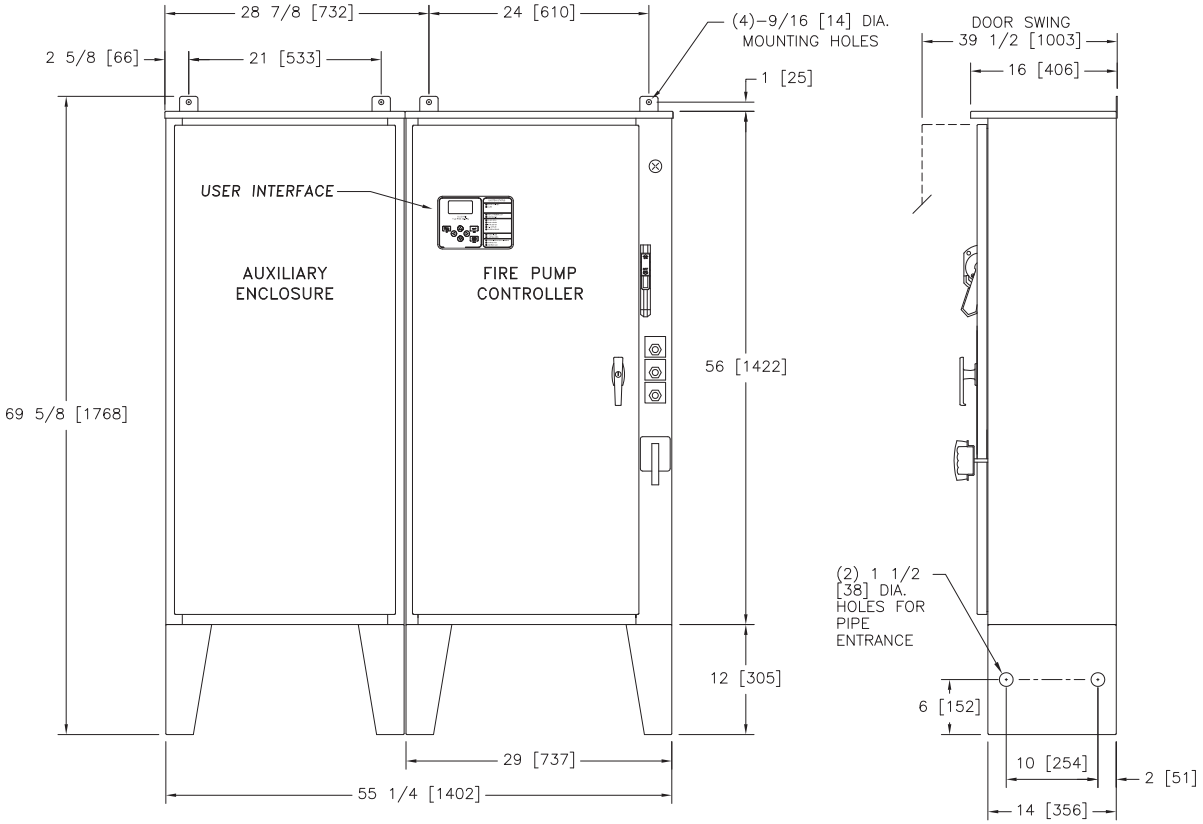

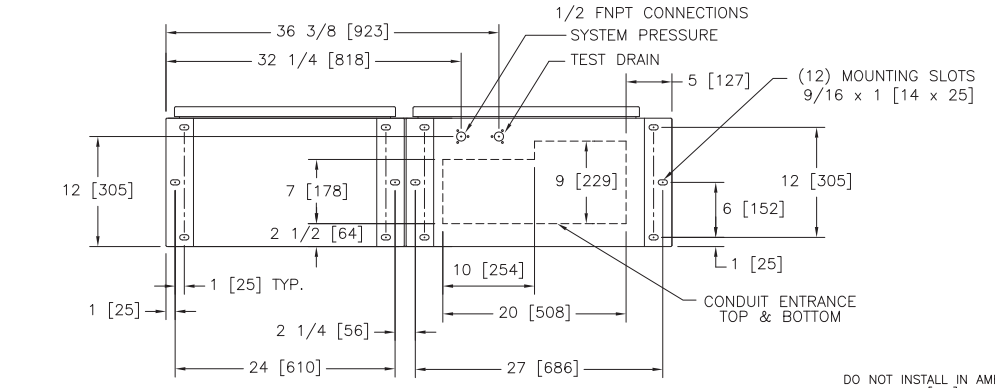

STANDARD WITHSTAND RATINGS 200–600V – 100,000 Amps RMS Sym. INTERMEDIATE WITHSTAND RATINGS 200–600V – 150,000 Amps RMS Sym. HIGH WITHSTAND RATINGS 200–600V – 200,000 Amps RMS Sym.	
LINE VOLTAGE	MOTOR HORSEPOWER
200	☐ ---
208	☐ 125
220–240	☐ 125
380–415	☐ 125–200
440–480	☐ 200–250
550–600	☐ 200–300

APPROXIMATE SHIPPING WEIGHT
500 [227]

DO NOT INSTALL IN AMBIENT TEMPERATURES BELOW 41°F [5°C].

ALL DIMENSIONS – INCHES [MM]
SHIPPING WEIGHT – POUNDS [KG]

THIS DIMENSION DRAWING COVERS FTA1500 CONTROLLERS AT THE HORSEPOWER, VOLTAGE AND WITHSTAND RATINGS AS LISTED IN THE TABLE. FOR OTHER HORSEPOWER OR WITHSTAND RATINGS, REFER TO ED1500–02

SPECIFICATIONS AND DIMENSIONS SUBJECT TO CHANGE WITHOUT NOTICE. DO NOT USE FOR CONSTRUCTION. REQUEST CONSTRUCTION DRAWINGS FROM FIRETROL OR YOUR LOCAL FIRETROL REPRESENTATIVE.

REVISION DESCRIPTION	REV	ECN NO	BY	APP	DATE
UPDATED TITLE BLOCK	D	281057	JMW	TEF	10-02-19
REVISED MOTOR HORSEPOWER CHART	C	237408	JMW	TEF	06-04-12

	SIZE	BY	DATE
THIRD ANGLE PROJECTION	A		
	DRAWN BY	TEF	07-25-02
	FINAL APPROVAL	TEF	07-25-02

Firetrol, Inc.

© Firetrol, Inc. Not for construction. Subject to change without notice.

DIMENSIONS AND SHIPPING WEIGHT | FTA1500

PRIMARY RESISTOR FIRE PUMP CONTROLLER

DRAWING NUMBER DD1500-57

DWG REV D | ECN NO 281057 | SHEET 1 OF 1

All rights reserved. The drawing and the information contained or depicted herein are the sole property of Firetrol, Inc. Copies are communicated to the recipient in strict confidence and may not be retransmitted, published, reproduced, copied or used in any manor, including as the basis for the manufacture or sale of any products, without the express prior written consent of Firetrol, Inc.

Firetrol

Mark IIXG Electric Fire Pump Controllers

Dimensions and Shipping Weight

FTA1500

Primary Resistor Starting

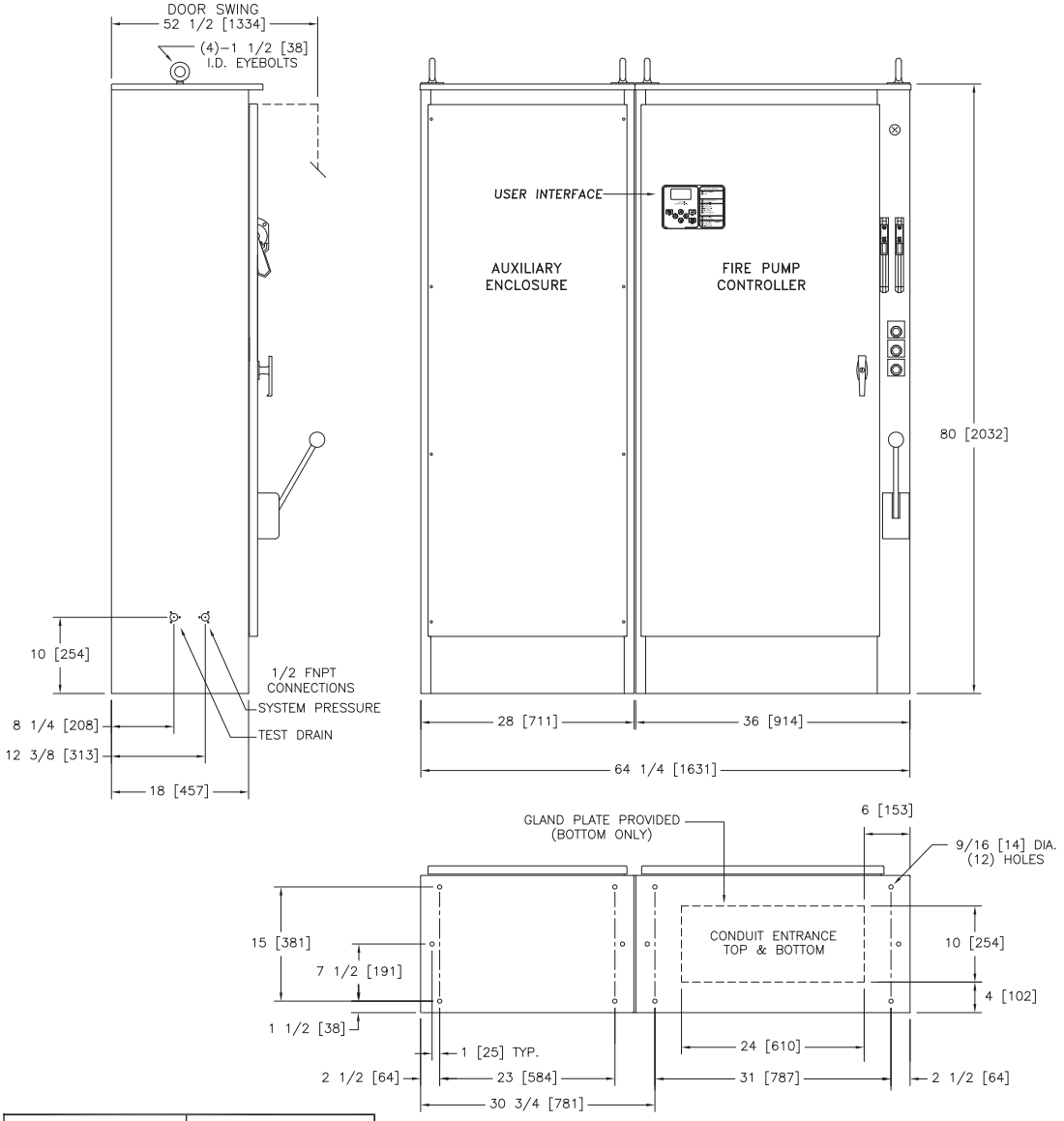

LINE VOLTAGE	STANDARD WITHSTAND RATINGS 200–600V 100,000 Amps RMS Sym. INTERMEDIATE WITHSTAND RATINGS 200–600V 150,000 Amps RMS Sym. HIGH WITHSTAND RATINGS 200–600V 200,000 Amps RMS Sym. MOTOR HORSEPOWER	STANDARD INTERMEDIATE WITHSTAND RATINGS 200–480V 65,000 Amps RMS Sym. STANDARD LOW WITHSTAND RATINGS 550–600V 42,000 Amps RMS Sym. MOTOR HORSEPOWER
200	☐ 125–200	☐ 250
208	☐ 150–200	☐ 250
220–240	☐ 150–250	☐ 300
380–415	☐ 250–350	☐ 400–500
440–480	☐ 300–500	☐ 600
550–600	☐ ---	☐ ---

APPROXIMATE SHIPPING WEIGHT
950 [430]

DO NOT INSTALL IN AMBIENT TEMPERATURES BELOW 41°F [5°C].

ALL DIMENSIONS – INCHES [MM]
SHIPPING WEIGHT – POUNDS [KG]

THIS DIMENSION DRAWING COVERS FTA1500 CONTROLLERS AT THE HORSEPOWER, VOLTAGE AND WITHSTAND RATINGS AS LISTED IN THE TABLE. FOR OTHER HORSEPOWER OR WITHSTAND RATINGS, REFER TO ED1500–02

SPECIFICATIONS AND DIMENSIONS SUBJECT TO CHANGE WITHOUT NOTICE. DO NOT USE FOR CONSTRUCTION. REQUEST CONSTRUCTION DRAWINGS FROM FIRETROL OR YOUR LOCAL FIRETROL REPRESENTATIVE.

REVISION DESCRIPTION	REV	ECN NO	BY	APP	DATE
UPDATED TITLE BLOCK	D	281057	JMW	TEF	10-02-19
REVISED MOTOR HORSEPOWER CHART	C	237408	JMW	TEF	06-04-12

	SIZE	BY	DATE
THIRD ANGLE PROJECTION	A		
DRAWN BY	TEF	07-24-02	
FINAL APPROVAL	TEF	07-24-02	

Firetrol, Inc.

© Firetrol, Inc. Not for construction. Subject to change without notice.

DIMENSIONS AND SHIPPING WEIGHT FTA1500

PRIMARY RESISTOR FIRE PUMP CONTROLLER

DRAWING NUMBER DD1500-60

DWG REV D | ECN NO 281057 | SHEET 1 OF 1

All rights reserved. The drawing and the information contained or depicted herein are the sole property of Firetrol, Inc. Copies are communicated to the recipient in strict confidence and may not be retransmitted, published, reproduced, copied or used in any manor, including as the basis for the manufacture or sale of any products, without the express prior written consent of Firetrol, Inc.

Field Connections
FTA1500
Primary Resistor Starting

Mark IIXG Electric Fire Pump Controllers

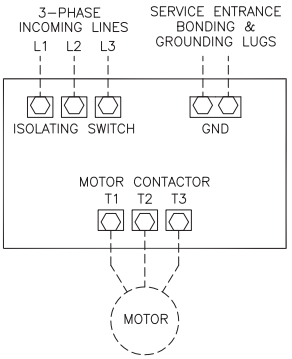

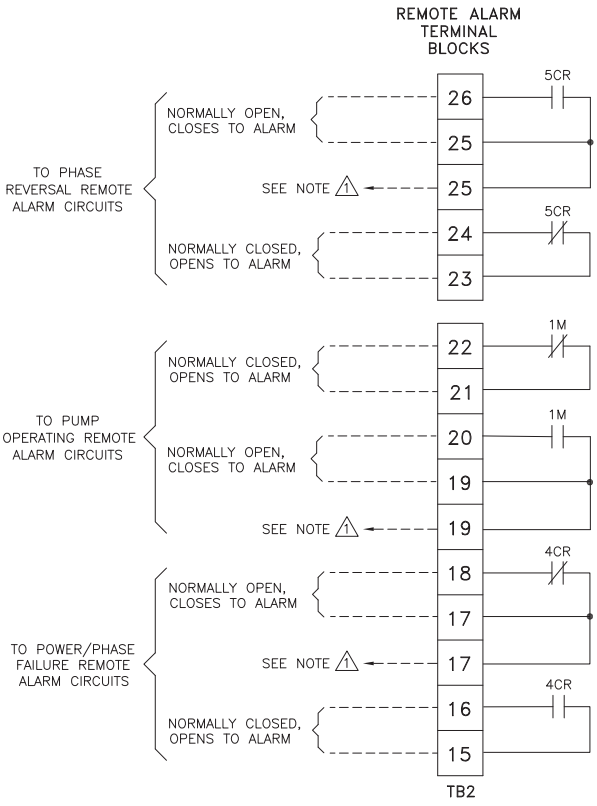

NOTES

1– Incoming line terminals are provided to accommodate wire sizes at 125% of motor full load current per NFPA 70–2008, *National Electrical Code*, Table 430–250, Section 695.6(c), and Table 310–16, 75° rated Copper conductors.

2– Controller is phase rotation sensitive. Incoming lines L1, L2 and L3 must be in ABC, right hand rotation sequence for proper operation of the phase monitor.

3– Motor connections shown are typical. Since motor connections vary widely, refer to the motor connection diagram for specific wiring arrangement.

4– For Incoming line terminals and motor terminals field wire capacity refer to drawing FC1500–51

NOTE: USE COPPER CONDUCTORS ONLY FOR ALL CONNECTIONS

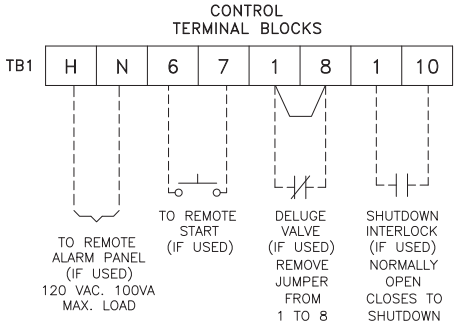

1 SPARE TERMINALS PROVIDED FOR PARALLEL CONNECTION OF REMOTE ALARMS (IF REQUIRED)

NOTE: TERMINALS FOR CUSTOMER CONNECTIONS REQUIRE 3.5MM SLOTTED SCREW DRIVER

TERMINAL TIGHTENING TORQUE		
TERMINAL TYPE	WIRE SIZE	TIGHTENING TORQUE
CONTROL AND ALARM TERMINALS	#14–12 AWG [2.5–4 MM^2]	5.6 lb–in [.6 Nm]

PRESSURE SYSTEM CONNECTION 1/2" FNPT

–NOTE–
ALARM CONTACT RATING PILOT DUTY 250 VAC, 30 VDC 10 A. MAX. LOAD

REV	REVISION DESCRIPTION	ECN NO	BY	APP	DATE
B	UPDATED TITLE BLOCK	281057	JMW	TEF	10-02-19
A	ADD NOTE FOR COPPER CONDUCTORS ONLY, UPDATED LOGO & TITLE BLOCK	226253	JC	TEF	12-09-09

	SIZE	BY	DATE
THIRD ANGLE PROJECTION	A		
	DRAWN BY	TEF	05-04-02
	FINAL APPROVAL	TEF	05-04-02

Firetrol, Inc.

© Firetrol, Inc. Not for construction. Subject to change without notice.

FIELD CONNECTIONS | FTA1500

PRIMARY RESISTOR FIRE PUMP CONTROLLER

DRAWING NUMBER FC1500-50

DWG REV B | ECN NO 281057 | SHEET 1 OF 2

All rights reserved. The drawing and the information contained or depicted herein are the sole property of Firetrol, Inc. Copies are communicated to the recipient in strict confidence and may not be retransmitted, published, reproduced, copied or used in any manor, including as the basis for the manufacture or sale of any products, without the express prior written consent of Firetrol, Inc.

Field Connections
FTA1500
Primary Resistor Starting

Mark IIXG Electric Fire Pump Controllers

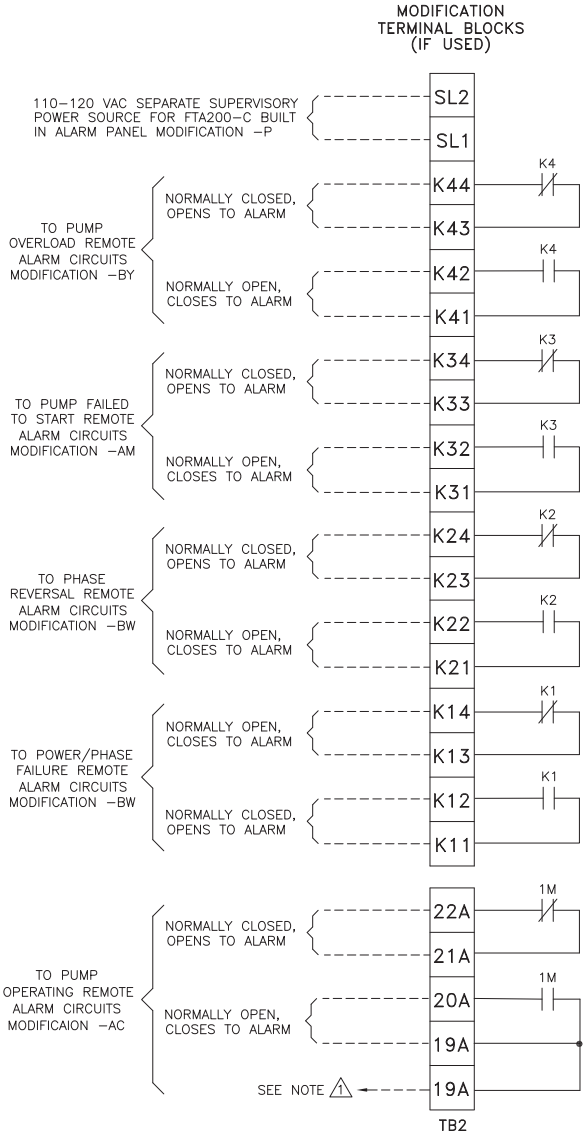

1 SPARE TERMINALS PROVIDED FOR PARALLEL CONNECTION OF REMOTE ALARMS (IF REQUIRED)

NOTE: TERMINALS FOR CUSTOMER CONNECTIONS REQUIRE 3.5MM SLOTTED SCREW DRIVER

TERMINAL TIGHTENING TORQUE		
TERMINAL TYPE	WIRE SIZE	TIGHTENING TORQUE
CONTROL AND ALARM TERMINALS	#14–12 AWG [2.5–4 MM²]	5.6 lb–in [.6 Nm]

–NOTE–
ALARM CONTACT RATING PILOT DUTY
250 VAC, 30 VDC
10 A. MAX. LOAD

NOTE: USE COPPER CONDUCTORS ONLY FOR ALL CONNECTIONS

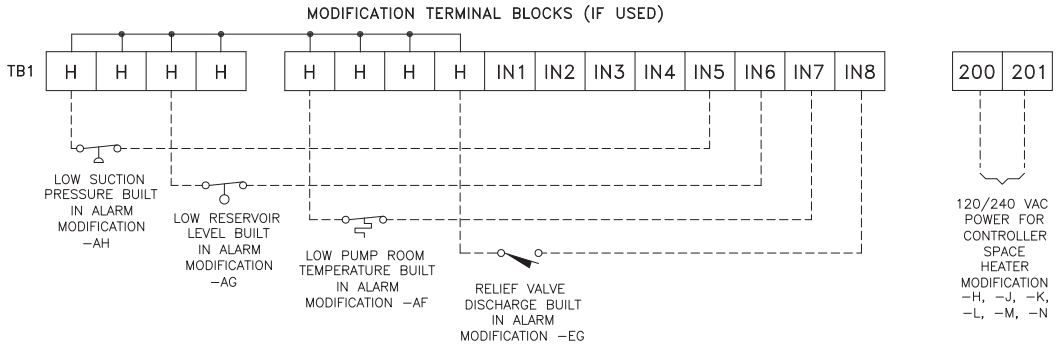

REVISION DESCRIPTION	REV	ECN NO	BY	APP	DATE
UPDATED TITLE BLOCK	B	281057	JMW	TEF	10-02-19
ADD NOTE FOR COPPER CONDUCTORS ONLY, UPDATED LOGO & TITLE BLOCK	A	226253	JC	TEF	12-09-09

	SIZE	BY	DATE
THIRD ANGLE PROJECTION	A		
DRAWN BY		TEF	05-04-02
FINAL APPROVAL		TEF	05-04-02

Firetrol, Inc.

© Firetrol, Inc. Not for construction. Subject to change without notice.

FIELD CONNECTIONS | FTA1500

PRIMARY RESISTOR FIRE PUMP CONTROLLER

DRAWING NUMBER FC1500-50

DWG REV B | ECN NO 281057 | SHEET 2 OF 2

All rights reserved. The drawing and the information contained or depicted herein are the sole property of Firetrol, Inc. Copies are communicated to the recipient in strict confidence and may not be retransmitted, published, reproduced, copied or used in any manor, including as the basis for the manufacture or sale of any products, without the express prior written consent of Firetrol, Inc.

Firetrol

Mark IIXG Electric Fire Pump Controllers

Field Connections

FTA1500

Primary Resistor Starting
Line & Motor Wire Terminal Capacity

LINE TERMINALS–WIRE CAPACITY AND QUANTITY (CU) (1)

MAXIMUM MOTOR HORSEPOWER						WIRE SIZE (CU) PER PHASE	WIRE SIZE SERVICE ENTRANCE GROUND LUG (CU) (2)
200V	208V	220–240V	380–415V	440–480V	550–600V		
25	25	30	50	60	75	(1) #14 AWG–#1/0 AWG (1) 2.5 MM^2–50 MM^2	(2) #14 AWG–#2/0 AWG (2) 2.5 MM^2–70 MM^2
30	30	40	60	75	100	(1) #2 AWG–#4/0 AWG (1) 35 MM^2–100 MM^2	(2) #14 AWG–#2/0 AWG (2) 2.5 MM^2–70 MM^2
50	50	60	100	125	---	(1) #4 AWG–300 kcmil (1) 25 MM^2–150 MM^2	(2) #14 AWG–#2/0 AWG (2) 2.5 MM^2–70 MM^2
60	75	75	125	150	200	(1) #6 AWG–350 kcmil (1) 16 MM^2 –185 MM^2	(2) #6 AWG–250 kcmil (2) 16 MM^2–120 MM^2
100	100	100	150	250	300	(1) 250 kcmil–500 kcmil (1) 120 MM^2–240 MM^2	(2) #6 AWG–250 kcmil (2) 16 MM^2–120 MM^2
---	125	125	200	---	350	(2) #3/0 AWG–250 kcmil (2) 95 MM^2–120 MM^2	(2) #6 AWG–250 kcmil (2) 16 MM^2–120 MM^2
250	250	250	400	500	700	(3) #2/0 AWG–400 kcmil (3) 70 MM^2 –200 MM^2	(2) #6 AWG–250 kcmil (2) 16 MM^2–120 MM^2
---	---	300	500	600	---	(4) #4/0 AWG–500 kcmil (4) 100 MM^2–240 MM^2	(2) #6 AWG–250 kcmil (2) 16 MM^2–120 MM^2

MOTOR TERMINALS–WIRE CAPACITY AND QUANTITY (CU) (1)

MAXIMUM MOTOR HORSEPOWER						WIRE SIZE (CU) PER PHASE
200V	208V	220–240V	380–415V	440–480V	550–600V	
30	30	40	60	75	100	(1) #6 AWG–#2/0 AWG (1) 16 MM^2–70 MM^2
50	50	60	75	125	150	(1) #6 AWG–250 kcmil (1) 16 MM^2–120 MM^2
75	75	100	150	200	250	(1) #4 AWG–400 kcmil (1) 25 MM^2–200 MM^2
100	100	---	---	250	300	(2) #4 AWG–500 kcmil (2) 25 MM^2–240 MM^2
200	200	200	350	500	600	(2) 250 kcmil–500 kcmil (2) 120 MM^2–240 MM^2
250	250	300	500	600	700	(3) #2/0 AWG–500 kcmil (3) 70 MM^2–240 MM^2

(1) FOR CORRECT WIRE SIZING, REFER TO *NATIONAL ELECTRICAL CODE*, NFPA 70.

(2) WHEN REQUIRED BY AUTHORITY HAVING JURISDICTION.

REVISION DESCRIPTION	REV	ECN NO	BY	APP	DATE
UPDATED TITLE BLOCK	B	281057	JMW	TEF	10-02-19
UPDATED LOGO AND TITLE BLOCK	A	226994	JC	TEF	12-09-09

	SIZE	BY	DATE
THIRD ANGLE PROJECTION	A		
DRAWN BY	TEF	05-06-02	
FINAL APPROVAL	TEF	05-06-02	

Firetrol, Inc.

© Firetrol, Inc. Not for construction. Subject to change without notice.

FIELD CONNECTIONS | FTA1500

PRIMARY RESISTOR FIRE PUMP CONTROLLER
LINE AND MOTOR FIELD WIRE TERMINAL CAPACITY

DRAWING NUMBER FC1500-51

DWG REV B | ECN NO 281057 | SHEET 1 OF 1

All rights reserved. The drawing and the information contained or depicted herein are the sole property of Firetrol, Inc. Copies are communicated to the recipient in strict confidence and may not be retransmitted, published, reproduced, copied or used in any manor, including as the basis for the manufacture or sale of any products, without the express prior written consent of Firetrol, Inc.

Firetrol

Mark IIXG Electric Fire Pump Controllers

Wiring Schematic

FTA1500

Primary Resistor Starting

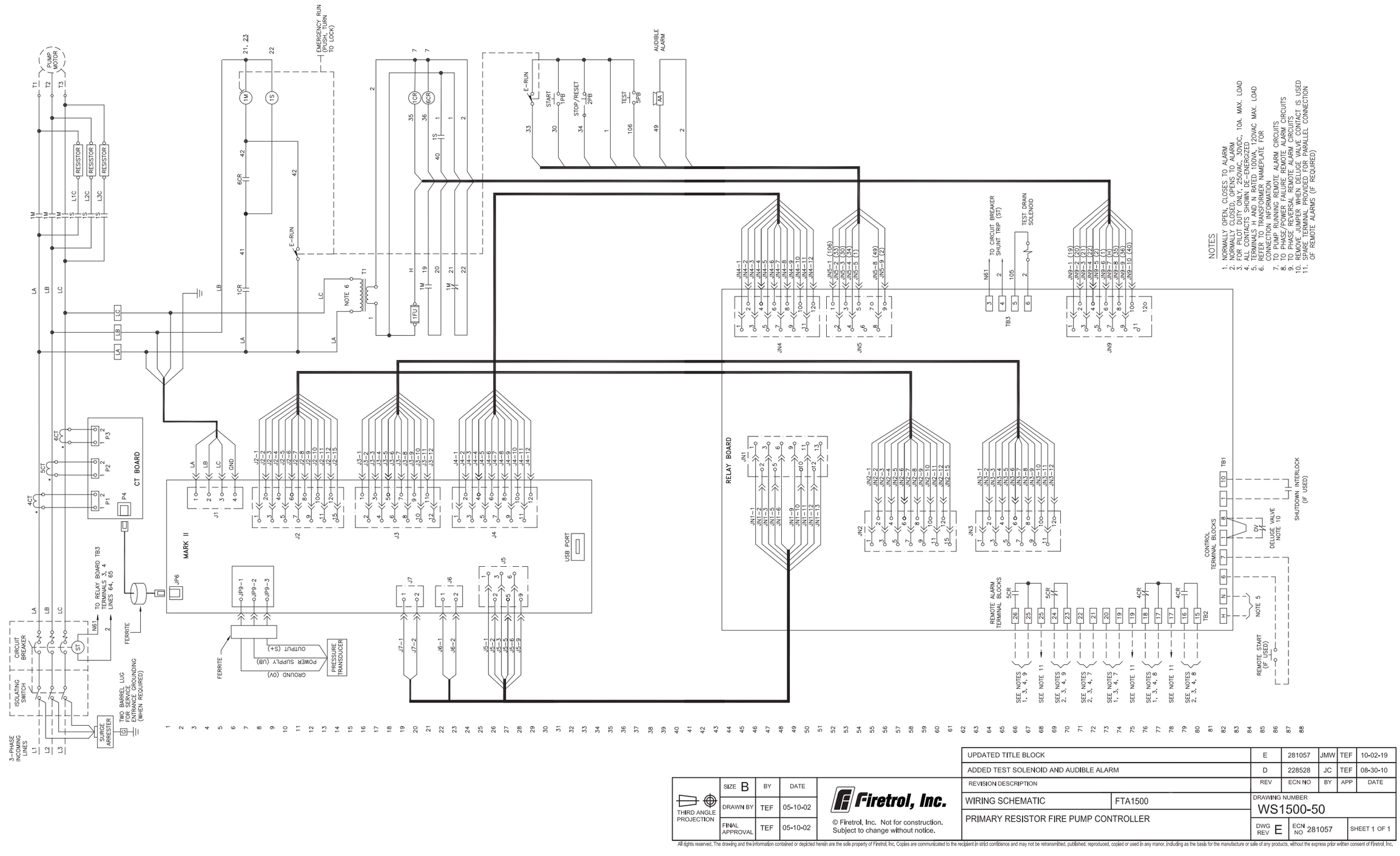

UPDATED TITLE BLOCK				E	281057	JMW	TEF	10-02-19
ADDED TEST SOLENOID AND AUDIBLE ALARM				D	228528	JC	TEF	08-30-10
REVISION DESCRIPTION				REV	ECN NO	BY	APP	DATE
THIRD ANGLE PROJECTION	SIZE B	BY	DATE	Firetrol, Inc.	WIRING SCHEMATIC	FTA1500	DRAWING NUMBER WS1500-50	
	DRAWN BY	TEF	05-10-02	© Firetrol, Inc. Not for construction. Subject to change without notice.	PRIMARY RESISTOR FIRE PUMP CONTROLLER		DWG REV E	ECN NO 281057	SHEET 1 OF 1
	FINAL APPROVAL	TEF	05-10-02					

All rights reserved, The drawing and the information contained or depicted herein are the sole property of Firetrol, Inc. Copies are communicated to the recipient in strict confidence and may not be retransmitted, published, reproduced, copied or used in any manor, including as the basis for the manufacture or sale of any products, without the express prior written consent of Firetrol, Inc.