Standard Drawing Package
FTA740/976

Mark IIxg 1Ø Limited Service Electric Fire Pump Controller

Single Phase Starting with Power Transfer Switch

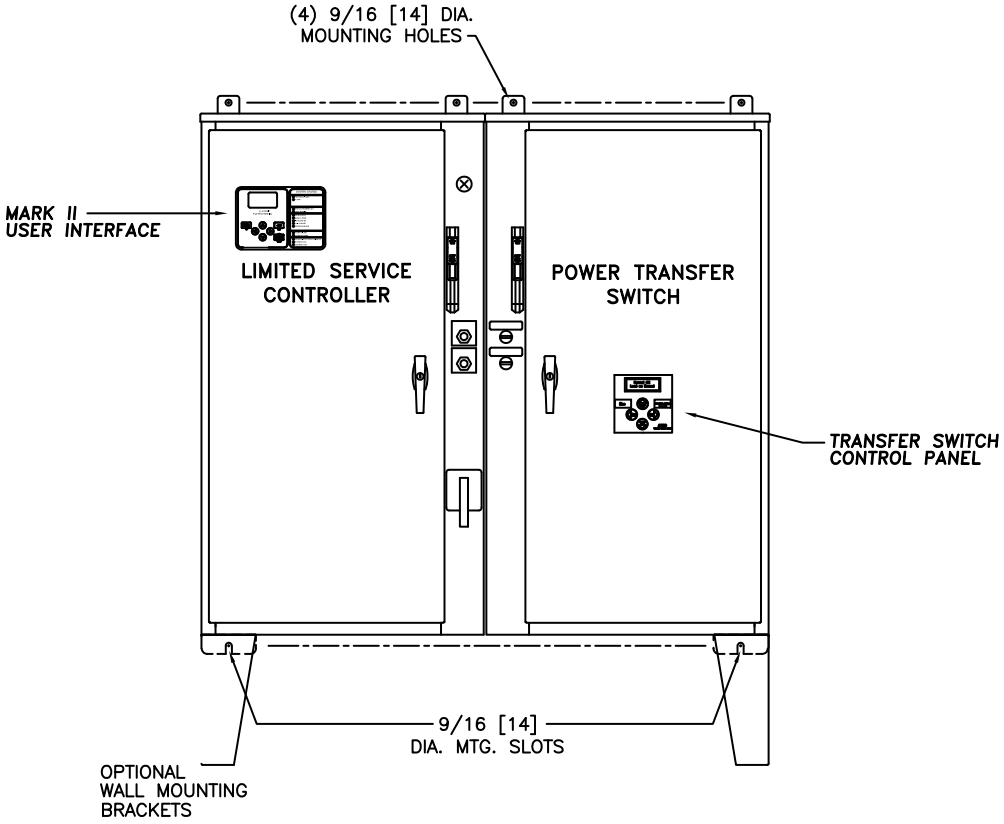

(DRAWINGS INCLUDED IN THIS PACKAGE ARE FOR STANDARD CONTROLLERS. ACTUAL "AS BUILT" DRAWINGS MAY DIFFER FROM THOSE SEEN HERE).

Firetrol, Inc.
3412 Apex Peakway
Apex, North Carolina 27502
P 919 460-5200
F 919 460 5250
www.firetrol.com

While every precaution has been taken to ensure accuracy and completeness herein, Firetrol, Inc. assumes no responsibility, and disclaims all liability, for damages resulting from use of this information or for any errors or omissions. Specifications and drawings are subject to change without notice. ©2019 Firetrol, Inc., All Rights Reserved.

Publication IM740TA Rev. J

Firetrol

Mark IIXG 1Ø Limited Service Electric Fire Pump Controllers

Dimensions and Shipping Weight FTA740/976

Single Phase Starting with Power Transfer Switch

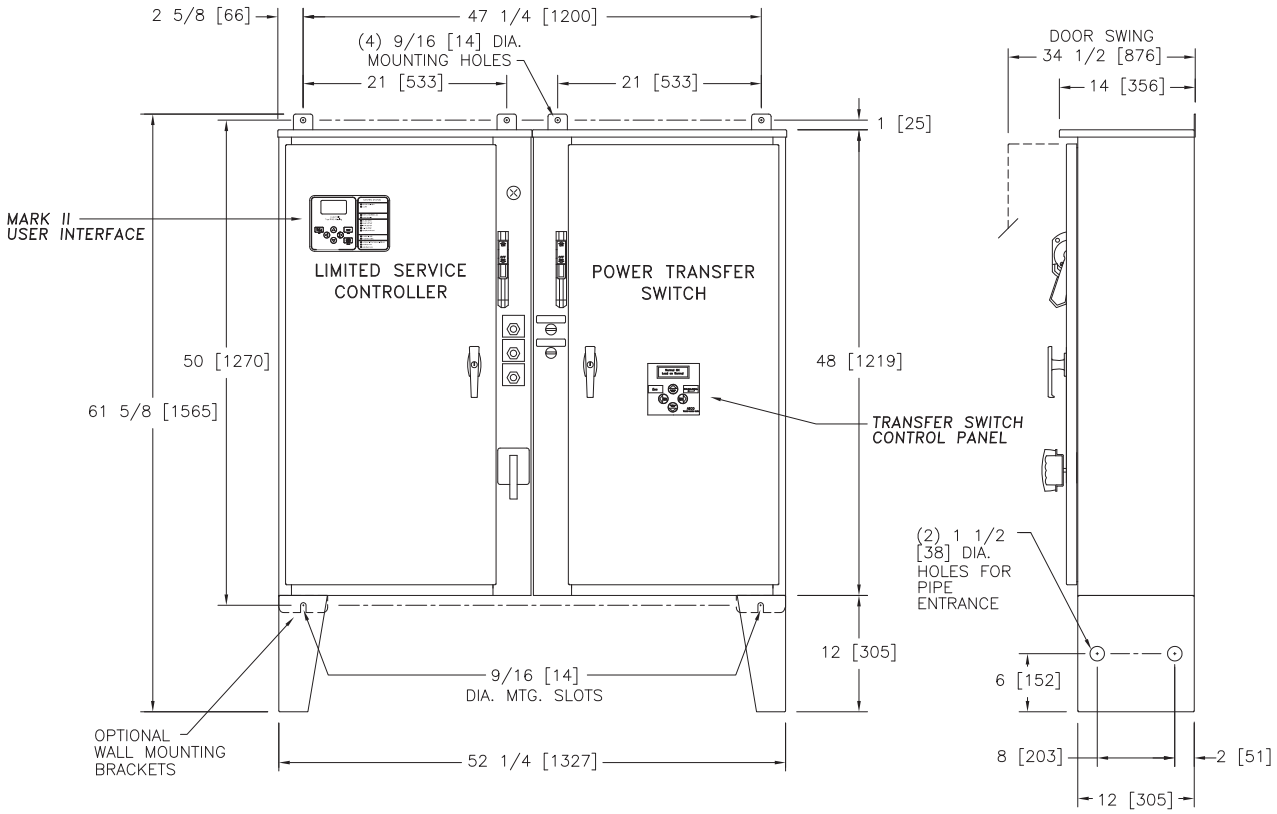

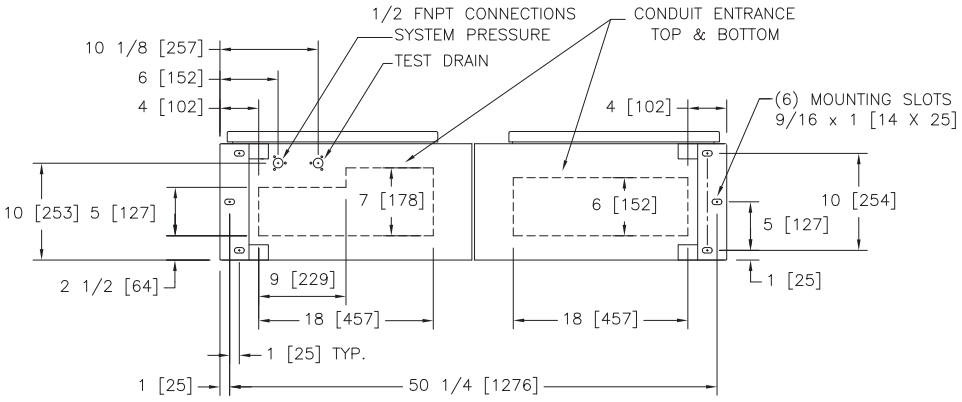

NOTE:
TEST DRAIN CONNECTION MUST BE PIPED TO WASTE DRAIN. FAILURE TO CONNECT TO A FLOOR DRAIN WILL RESULT IN UNSAFE CONDITIONS OF STANDING WATER AROUND CONTROLLER.

WITHSTAND OPTIONS	
STANDARD WITHSTAND (OPTION D) INTERMEDIATE WITHSTAND (OPTION E)	
LINE VOLTAGE	MOTOR HORSEPOWER
200–240	☐ 3–15

APPROXIMATE SHIPPING WEIGHT
460 [209]

DO NOT INSTALL IN AMBIENT TEMPERATURES BELOW 41°F [5°C].

ALL DIMENSIONS – INCHES [MM]
SHIPPING WEIGHT – POUNDS [KG]

THIS DIMENSION DRAWING COVERS FTA740 CONTROLLERS AT THE HORSEPOWER, VOLTAGE AND WITHSTAND RATINGS AS LISTED IN THE TABLE.

DIMENSIONS SHOWN ON THIS DRAWING ARE APPLICABLE FOR NEMA TYPES 2/3R/4/4X/12

SPECIFICATIONS AND DIMENSIONS SUBJECT TO CHANGE WITHOUT NOTICE. DO NOT USE FOR CONSTRUCTION. REQUEST CONSTRUCTION DRAWINGS FROM FIRETROL OR YOUR LOCAL FIRETROL REPRESENTATIVE.

REVISION DESCRIPTION	REV	ECN NO	BY	APP	DATE
UPDATED TITLE BLOCK	B	280889	JMW	TEF	09-16-19
REVISED TO BE IN COMPLIANCE WITH UL218 THIRD EDITION	A	271074	JMW	TEF	04-18-18

	SIZE	BY	DATE
THIRD ANGLE PROJECTION	A		
	DRAWN BY	TEF	06-04-13
	FINAL APPROVAL	TEF	06-04-13

Firetrol, Inc.

© Firetrol, Inc. Not for construction. Subject to change without notice.

DIMENSIONS & SHIPPING WEIGHT — FTA740 WITH FTA976

LIMITED SERVICE FIRE PUMP CONTROLLER WITH POWER TRANSFER SWITCH

DRAWING NUMBER DD740-61

DWG REV B | ECN NO 280889 | SHEET 1 OF 1

All rights reserved. The drawing and the information contained or depicted herein are the sole property of Firetrol, Inc. Copies are communicated to the recipient in strict confidence and may not be retransmitted, published, reproduced, copied or used in any manor, including as the basis for the manufacture or sale of any products, without the express prior written consent of Firetrol, Inc.

Field Connections
FTA740/976
Single Phase Starting with Power Transfer Switch

Mark IIXG 1Ø Limited Service Electric Fire Pump Controllers

LINE TERMINALS–WIRE CAPACITY AND QUANTITY (CU) (1)

MAXIMUM MOTOR HORSEPOWER 200–240V	WIRE SIZE (CU) PER PHASE	WIRE SIZE GROUND LUG (CU)
15	(1) #14 AWG–#1/0 AWG (1) 2.5 MM² – 50 MM²	(2) #14 AWG–#2/0 AWG (2) 2.5 MM² – 70 MM²

MOTOR TERMINALS–WIRE CAPACITY AND QUANTITY (CU) (1)

MAXIMUM MOTOR HORSEPOWER 200–240V	WIRE SIZE (CU) PER PHASE
15	(1) #6 AWG–#2/0 AWG (1) 16 MM² – 70 MM²

(1) FOR CORRECT WIRE SIZING, REFER TO *NATIONAL ELECTRICAL CODE*, NFPA 70.

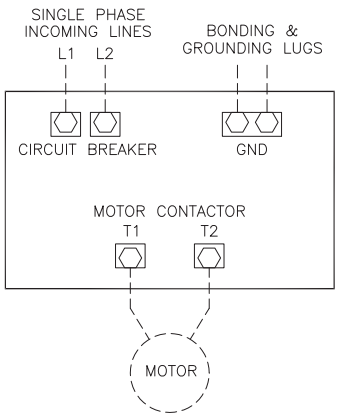

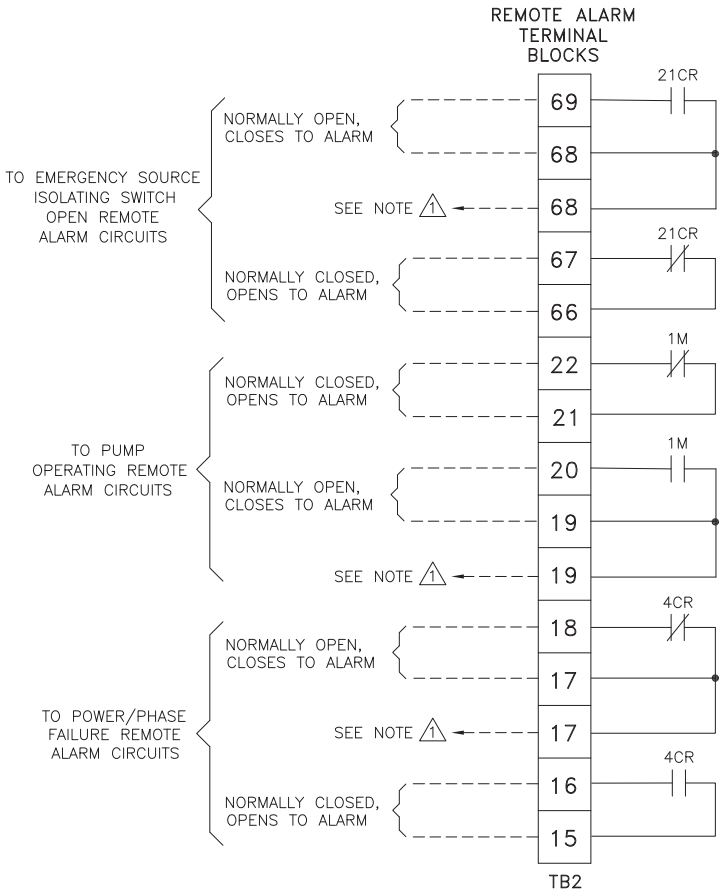

PRESSURE SYSTEM CONNECTION 1/2" FNPT

–NOTE–
ALARM CONTACT RATING PILOT DUTY 250 VAC, 30 VDC 10 A. MAX. LOAD

NOTES

1– Incoming line terminals are provided to accommodate wire sizes at 125% of motor full load current per NFPA 70, *National Electrical Code*, Table 430–248, Section 695.6(c), and Table 310–16, 75° rated Copper conductors.

2– Motor connections shown are typical. Since motor connections vary widely, refer to the motor connection diagram for specific wiring arrangement.

(1) SPARE TERMINALS PROVIDED FOR PARALLEL CONNECTION OF REMOTE ALARMS (IF REQUIRED)

NOTE: TERMINALS FOR CUSTOMER CONNECTIONS REQUIRE 3.5MM SLOTTED SCREW DRIVER

TERMINAL TIGHTENING TORQUE		
TERMINAL TYPE	WIRE SIZE	TIGHTENING TORQUE
CONTROL AND ALARM TERMINALS	#14–12 AWG [2.5–4 MM²]	5.6 lb–in [.6 Nm]

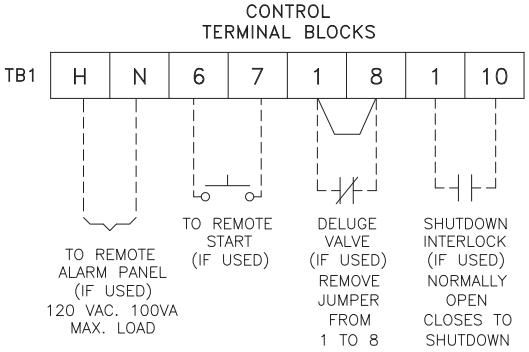

REV	REVISION DESCRIPTION	ECN NO	BY	APP	DATE
A	UPDATED TITLE BLOCK	280889	JMW	TEF	09-16-19
-	NEW ISSUE	242752	TEF	TEF	06-04-13

	SIZE	BY	DATE
THIRD ANGLE PROJECTION	A		
	DRAWN BY	TEF	06-04-13
	FINAL APPROVAL	TEF	06-04-13

Firetrol, Inc.

© Firetrol, Inc. Not for construction. Subject to change without notice.

FIELD CONNECTIONS | FTA740 WITH FTA976

SINGLE PHASE LIMITED SERVICE CONTROLLER WITH POWER TRANSFER SWITCH

DRAWING NUMBER FC740-55

DWG REV A | ECN NO 280889 | SHEET 1 OF 1

All rights reserved. The drawing and the information contained or depicted herein are the sole property of Firetrol, Inc. Copies are communicated to the recipient in strict confidence and may not be retransmitted, published, reproduced, copied or used in any manor, including as the basis for the manufacture or sale of any products, without the express prior written consent of Firetrol, Inc.

Firetrol
Power Transfer Switches

Field Connections
FTA976
Assembled With 1Ø Limited Service Electric Fire Pump Controllers

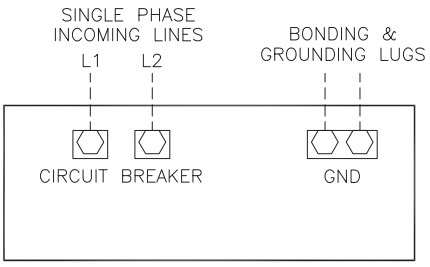

NOTE

Incoming line terminals are provided to accomodate wire sizes at 125% of motor full load current per NFPA 70, *National Electrical Code*, Table 430–248, Section 695.6(c), and Table 310–16, 75° rated Copper conductors.

LINE TERMINALS–WIRE CAPACITY AND QUANTITY (CU) ⟨1⟩

MAXIMUM MOTOR HORSEPOWER 200–240V	WIRE SIZE (CU) PER PHASE	WIRE SIZE GROUND LUG (CU)
15	(1) #14 AWG–#1/0 AWG (1) 2.5 MM^2 – 50 MM^2	(2) #14 AWG–#2/0 AWG (2) 2.5 MM^2 – 70 MM^2

⟨1⟩ FOR CORRECT WIRE SIZING, REFER TO *NATIONAL ELECTRICAL CODE*, NFPA 70.

CONTROL AND ALARM TERMINAL BLOCKS

62	63	70	71	81	82	83	84

62–63: NORMALLY CLOSED –OPENS TO START ENGINE

70–71: NORMALLY OPEN –CLOSES TO START ENGINE

81–82: CONTACT OPEN WHEN TRANSFER SWITCH IS IN NORMAL, CLOSED WHEN IN EMERGENCY

83–84: CONTACT CLOSED WHEN TRANSFER SWITCH IS IN NORMAL, –OPENS WHEN IN EMERGENCY

62–71: ENGINE START CONTACTS

81–84: TRANSFER SWITCH POSITION INDICATOR CONTACTS FOR REMOTE ALARM CIRCUITS

NOTE: CONTROL AND ALARM TERMINALS FOR CUSTOMER CONNECTIONS REQUIRE 3.5MM SLOTTED SCREW DRIVER

–NOTE–
ENGINE START CONTACT RATING
1/2 AMP, 30VDC

TERMINAL TIGHTENING TORQUE		
TERMINAL TYPE	WIRE SIZE	TIGHTENING TORQUE
CONTROL AND ALARM TERMINALS	#14–12 AWG [2.5–4 MM^2]	7.1 lb–in [.8 Nm]

–NOTE–
ALARM CONTACT RATING
PILOT DUTY
240 VAC, 28 VDC
5 AMP MAX. LOAD

REVISION DESCRIPTION	REV	ECN NO	BY	APP	DATE
UPDATED TITLE BLOCK	A	281357	JMW	TEF	10-16-19
NEW RELEASE	-	229706	TEF	TEF	11-19-10

	SIZE	BY	DATE
THIRD ANGLE PROJECTION	A		
DRAWN BY	TEF		11-19-10
FINAL APPROVAL	TEF		11-19-10

Firetrol, Inc.

© Firetrol, Inc. Not for construction. Subject to change without notice.

FIELD CONNECTIONS | FTA976

LIMITED SERVICE CONTROLLER POWER TRANSFER SWITCH FOR GEN-SET AND SECOND UTILITY POWER SOURCE

DRAWING NUMBER FC976-56

DWG REV A | ECN NO 281357 | SHEET 1 OF 1

All rights reserved. The drawing and the information contained or depicted herein are the sole property of Firetrol, Inc. Copies are communicated to the recipient in strict confidence and may not be retransmitted, published, reproduced, copied or used in any manor, including as the basis for the manufacture or sale of any products, without the express prior written consent of Firetrol, Inc.

Wiring Schematic

FTA740/976

Single Phase Starting with Power Transfer Switch

Mark IIXG 1Ø Limited Service Electric Fire Pump Controllers

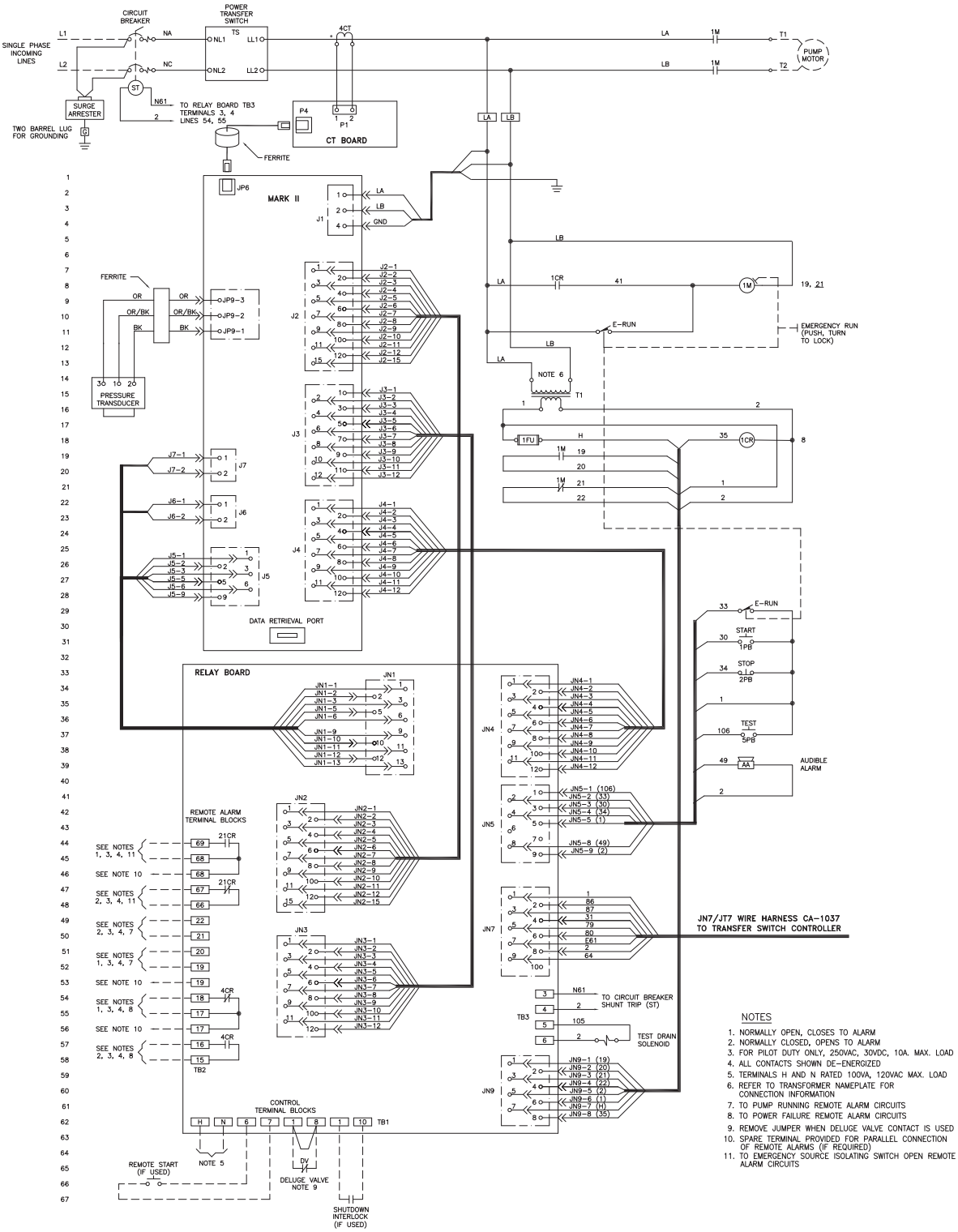

NOTES

1. NORMALLY OPEN, CLOSES TO ALARM
2. NORMALLY CLOSED, OPENS TO ALARM
3. FOR PILOT DUTY ONLY, 250VAC, 30VDC, 10A. MAX. LOAD
4. ALL CONTACTS SHOWN DE-ENERGIZED
5. TERMINALS H AND N RATED 100VA, 120VAC MAX. LOAD
6. REFER TO TRANSFORMER NAMEPLATE FOR CONNECTION INFORMATION
7. TO PUMP RUNNING REMOTE ALARM CIRCUITS
8. TO POWER FAILURE REMOTE ALARM CIRCUITS
9. REMOVE JUMPER WHEN DELUGE VALVE CONTACT IS USED
10. SPARE TERMINAL PROVIDED FOR PARALLEL CONNECTION OF REMOTE ALARMS (IF REQUIRED)
11. TO EMERGENCY SOURCE ISOLATING SWITCH OPEN REMOTE ALARM CIRCUITS

REVISION DESCRIPTION	REV	ECN NO	BY	APP	DATE
UPDATED TITLE BLOCK	B	280889	JMW	TEF	09-16-19
REVISED TO BE IN COMPLIANCE WITH UL218 THIRD EDITION	A	271029	JMW	TEF	02-08-18

	SIZE	BY	DATE
THIRD ANGLE PROJECTION	A		
DRAWN BY		TEF	06-04-14
FINAL APPROVAL		TEF	06-04-14

Firetrol, Inc.

© Firetrol, Inc. Not for construction. Subject to change without notice.

WIRING SCHEMATIC	FTA740 WITH FTA976	DRAWING NUMBER	WS740-55
SINGLE PHASE LIMITED SERVICE CONTROLLER WITH POWER TRANSFER SWITCH		DWG REV B	ECN NO 280889 — SHEET 1 OF 1

All rights reserved. The drawing and the information contained or depicted herein are the sole property of Firetrol, Inc. Copies are communicated to the recipient in strict confidence and may not be retransmitted, published, reproduced, copied or used in any manor, including as the basis for the manufacture or sale of any products, without the express prior written consent of Firetrol, Inc.

Firetrol

Power Transfer Switches

Wiring Schematic

FTA976

Assembled With 1Ø Limited Service Electric Fire Pump Controllers

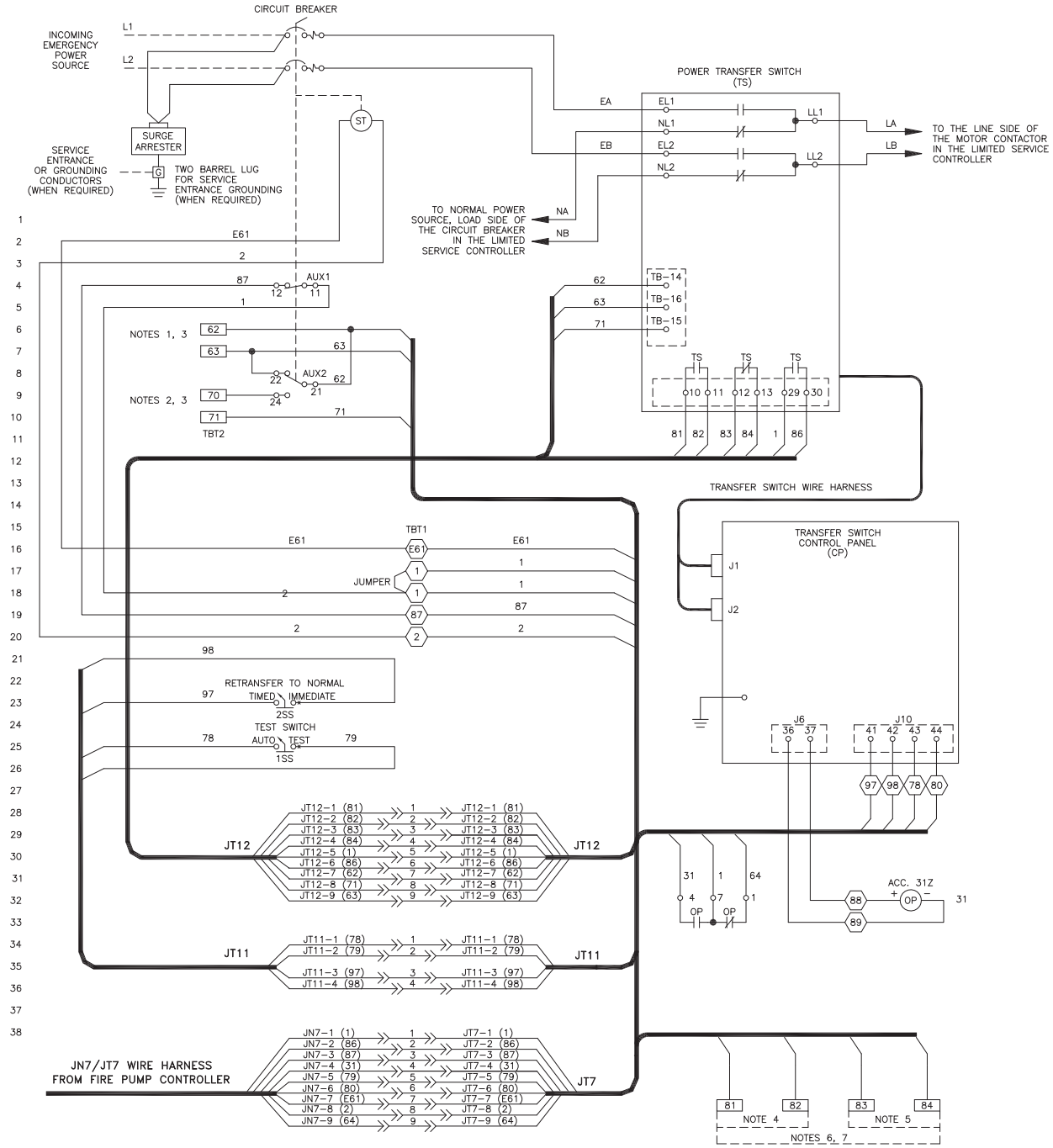

COMPONENT LOCATION

AUX1 – AUXILIARY SWITCH 1, CLOSES WHEN EMERGENCY ISOLATING IS OPENED – LINE 4
AUX2 – AUXILIARY SWITCH 2, INHIBITS GEN-SET FROM STARTING IF EMERGENCY ISOLATING SWITCH IS OPENED – LINES 8, 9

▭ – FIELD CONNECTION TERMINAL BLOCK

⬡ – INTERCONNECTION TERMINAL BLOCK (FOR FACTORY USE ONLY)

NOTES;

1 – NORMALLY CLOSED, OPENS TO START GENERATOR
2 – NORMALLY OPEN, CLOSES TO START GENERATOR
3 – GEN-SET START CONTACTS RATED 1/2AMP, 30VDC
4 – NORMALLY OPEN, CLOSES IN EMERGENCY
5 – NORMALLY CLOSED, OPENS IN EMERGENCY
6 – TRANSFER SWITCH POSITION REMOTE ALARM CONTACTS
7 – CONTACT RATING 5AMP MAX, 240VAC, 28VDC

REVISION DESCRIPTION	REV	ECN NO	BY	APP	DATE
UPDATED TITLE BLOCK	B	281357	JMW	TEF	10-16-19
REVISED TO BE IN COMPLIANCE WITH UL218 THIRD EDITION	A	271029	JMW	TEF	02-08-18

	SIZE	BY	DATE
THIRD ANGLE PROJECTION	A		
	DRAWN BY	TEF	06-04-13
	FINAL APPROVAL	TEF	06-04-13

Firetrol, Inc.

© Firetrol, Inc. Not for construction. Subject to change without notice.

WIRING SCHEMATIC	FTA976
LIMITED SERVICE CONTROLLER POWER TRANSFER SWITCH FOR GEN-SET AND SECOND UTILITY POWER SOURCE (SINGLE PHASE)	

DRAWING NUMBER WS976-56

DWG REV B | ECN NO 281357 | SHEET 1 OF 1

All rights reserved. The drawing and the information contained or depicted herein are the sole property of Firetrol, Inc. Copies are communicated to the recipient in strict confidence and may not be retransmitted, published, reproduced, copied or used in any manor, including as the basis for the manufacture or sale of any products, without the express prior written consent of Firetrol, Inc.