Submittal Package

FTA1100J

Mark IIXG Diesel Engine
Fire Pump Controllers

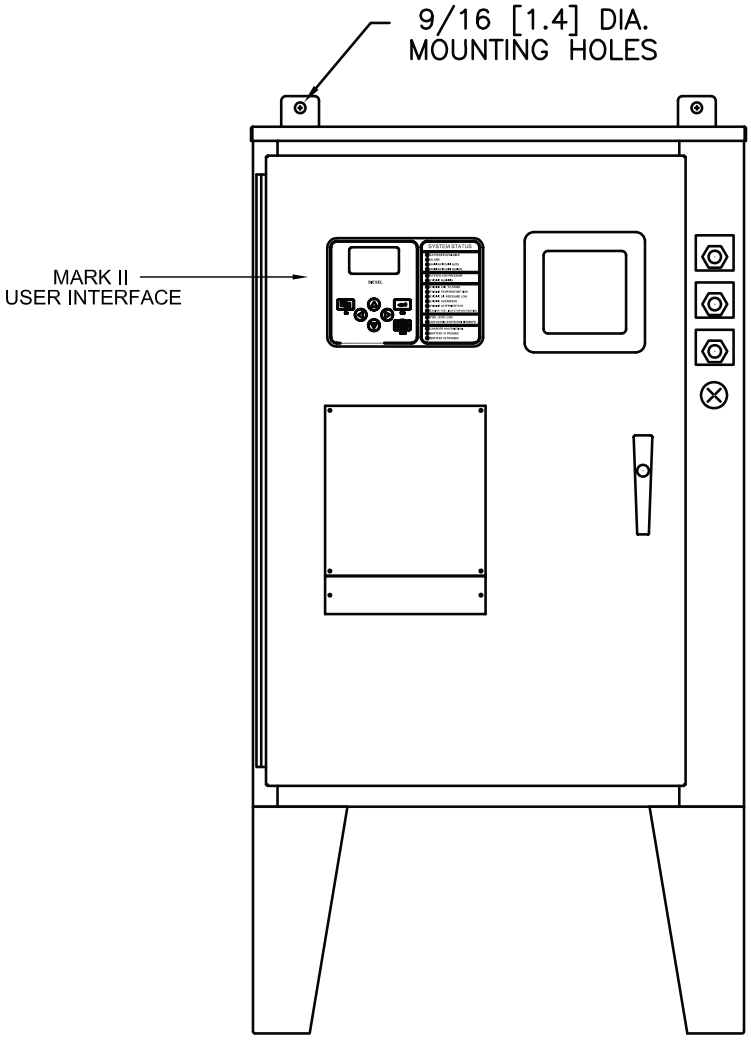

(DRAWINGS INCLUDED IN THIS PACKAGE ARE FOR STANDARD CONTROLLERS. ACTUAL "AS BUILT" DRAWINGS MAY DIFFER FROM THOSE SEEN HERE).

Firetrol, Inc.
3412 Apex Peakway
Apex, North Carolina 27502
P 919 460-5200
F 919 460 5250
www.firetrol.com

Publication SBP1100J Rev. F

Firetrol Mark IIXG Diesel Engine Fire Pump Controller

FTA1100J - 12 or 24 Volt

Specifications

1.0 Main Fire Pump Controller

The main fire pump controller shall be a factory assembled, wired and tested unit. The controller shall be of the combined manual and automatic type designed for diesel engine operation of the fire pump.

1.1 Standards, Listings & Approvals

The controller shall conform to all the requirements of the latest editions of:
NFPA 20, *Standard for the Installation of Stationary Pumps for Fire Protection*
NFPA 70, *National Electrical Code*

The controller shall be listed by:
Underwriters Laboratories, Inc., in accordance with UL218, *Standard for Fire Pump Controllers* Canadian Standards Association CSA-C22.2, *Standard for Industrial Control Equipment* (cUL)

The controller shall be approved by:
Factory Mutual (IEC 62091)

1.2 Enclosure

The controller components shall be housed in a NEMA Type 2 (IEC IP22) drip-proof, wall mounted enclosure.

1.3 Operator Interface

The fire pump controller shall feature an operator interface with user keypad. The interface shall monitor and display motor operating conditions, including all alarms, events, and pressure conditions. All alarms, events, and pressure conditions shall be displayed with a time and date stamp. The display shall be a 128x64 Backlit LCD capable of customized graphics. The display and interface shall be NEMA rated for Type 2, 3R, 4, 4X, and 12 protection and shall be fully accessible without opening the controller door. The display and user interface shall utilize multiple levels of password protection for system security. A minimum of 3 password levels shall be provided.

1.4 Digital Status/Alarm Messages

The digital display shall indicate text messages for the status and alarm conditions of:
• Engine Run • Remote Start • Min. Run Time / Off Delay Time • Manual Engine Crank • Engine Fail To Start • Electric Control Module (ECM) Warning • Drive Not Installed • ECM Failure • Disk Error • Low Suction Pressure PLD (Pressure Limiting Driver) • Sequential Start Time • High Raw Water Temp. • Crank/Rest Time Cycle • Clogged Raw Water Strainer • Low Engine Temp. • Interstitial/Fuel Spill • Disk Near Full • Pressure Error

The Sequential Start Timer and Minimum Run Timer/Off Delay Timer shall be displayed as numeric values reflecting the value of the remaining time.

1.5 LED Visual Indicators

LED indicators, visible with the door closed, shall indicate:
• AC Power Available • Alarm • Main Switch in Auto • Main Switch In Manual • System Pressure Low • Engine Running • Engine Fail To Start • Engine Temperature High • Engine Oil Pressure Low • Engine Overspeed • Engine Alternate ECM • Engine Fuel Injector Malfunction • Fuel Level Low • Automatic Shutdown Disabled • Charger Malfunction • Battery #1 Trouble • Battery #2 Trouble

1.6 Data Logging

The digital display shall monitor the system and log the following data:
• Motor Calls/Starts • Pump Total Run Time • Pump Last Run Time
• Total Controller Pwr On Time • Last Pump Start • Min/Max System Pressure
• Last High Temperature • Last Low Oil Pressure • Last Engine Overspeed
• Last Low Fuel Level • Last Charger Fail • Last Battery Trouble • Battery #1 Volts (Min./Now/Max.) • Battery #2 Volts (Min./Now/Max.) • Battery #1 Amps (Min./Now/Max) • Battery #2 Amps (Min./Now/Max.)

1.7 Event Recording

Memory - The controller shall record all operational and alarm events to system memory. All events shall be time and date stamped and include an index number. The system memory shall have the capability of storing 3000 events and allow the user access to the event log via the user interface. The user shall have the ability to scroll through the stored messages in groups of 1 or 10.

1.8 USB Host Controller

The controller shall have a built-in USB Host Controller. A USB port capable of accepting a USB Flash Memory Disk shall be provided. The controller shall save all operational and alarm events to the flash memory on a daily basis. Each saved event shall be time and date stamped. The total amount of historical data saved shall solely depend on the size of the flash disk utilized. The controller shall have the capability to save settings and values to the flash disk on demand via the user interface.

1.9 Serial Communications

The controller shall feature a RS485 serial communications port for use with 2 or 4 wire Modbus RTU communications.

2.0 Solid State Pressure Transducer

The controller shall be supplied with a solid state pressure transducer with a range of 0-300 psi (0-20.7 bar) ±1 psi. The solid state pressure switch shall be used for both display of the system pressure and control of the fire pump controller. Systems using analog pressure devices or mercury switches for operational control will not be accepted.
The START, STOP and SYSTEM PRESSURE shall be digitally displayed and adjustable through the user interface. The pressure transducer shall be mounted inside the controller to prevent accidental damage. The pressure transducer shall be directly pipe mounted to a bulkhead pipe coupling without any other supporting members. Field connections shall be made externally at the controller coupling to prevent distortion of the pressure switch element and mechanism.

2.1 Seismic Certification

The controller shall be certified to meet or exceed the requirements of the 2012 International Building Code and the 2013 California Building Code for Importance Factor 1.5 Electrical Equipment for Sds equal to 1.88 or less severe seismic regions. Qualifications shall be based upon successful tri-axial shake-table testing in accordance with ICC-ES AC-156. Certification without testing shall be unaccept-

able. Controller shall be clearly labeled as rated for installation in seismic areas and a Certificate of Conformance shall be provided with the controller.

2.2 Controller Operation

A digitally set On Delay (Sequential Start) timer shall be provided as standard. Upon a call to start, the user interface shall display a message indicating the remaining time value of the On Delay timer.

The controller shall be field programmable for manual stop or automatic stop. If set for automatic stopping, the controller shall allow the user to select either a Minimum Run Timer or an Off Delay Timer. Both timers shall be programmable through the user interface.

The controller shall include an AC Power Loss start timer to start the engine in the event of AC Power failure.

A weekly test timer shall be provided as standard. The controller shall have the ability to program the time, date, and frequency of the weekly test. In addition, the controller shall have the capability to display a preventative maintenance message for a service inspection. The message text and frequency of occurrence shall be programmable through the user interface.

A Lamp Test feature shall be included. The user interface shall also have the ability to display the status of the system inputs and outputs.

An Audible Test feature shall be included to test the operation of the audible alarm device.

2.3 Battery Chargers

The controller shall include two fully automatic, 200 amp hour, 4 step battery chargers. The chargers shall feature a qualification stage, in which the batteries are examined by the charger to insure that they are not defective and are capable of accepting a charge. The battery charger shall feature:

- Selectable AC Power Voltage
- Selectable Battery Voltage
- Selectable Battery Type
- Charge Cycle Reset Push-button

2.4 Manufacturer

The controller shall be a Firetrol brand.

3412 Apex Peakway
Apex, North Carolina 27502
P +1 919 460 5200
F +1 919 460 5250
www.firetrol.com

Firetrol™, Inc.

Publication SP1100-50 Rev. F

Product Description

FTA1100J

Mark IIxg Diesel Engine Fire Pump Controller

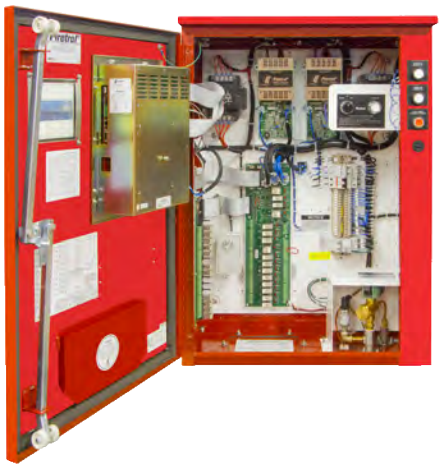

Description – Firetrol® combined automatic and manual Mark IIXG based diesel engine fire pump controllers are intended for starting and monitoring fire pump diesel engines. They are suitable for use with both mechanical and electronic type engines. The controller is available for 12 or 24 volt negative ground systems, using lead acid or Nickel-Cadmium batteries. The controller monitors, displays and records fire pump system information.

Approvals – Firetrol fire pump controllers are listed by Underwriters' Laboratories, Inc., in accordance with UL218, *Standard for Fire Pump Controllers*, CSA, *Standard for Industrial Control Equipment* (cUL), and approved by Factory Mutual. They are built to meet or exceed the requirements of the approving authorities as well as NEMA and the latest editions of NFPA 20, *Installation of Centrifugal Fire Pumps*, and NFPA 70, *National Electrical Code*.

Standard Features – The following are included as standard with each controller:

- AC Line & Battery circuit breakers
- Manual-Off-Auto selector switch
- Manual test push-button
- Two manual crank push-buttons
- Two 10 Amp battery chargers with 4 stage charging cycle, selectable AC voltage (110 / 220), selectable DC voltage (12 / 24), and selectable battery type (Lead Acid, Ni-Cad 9/18 Cell, Ni-Cad 10/20 Cell)
- Door mounted display/interface panel featuring a 128 x 64 pixel backlit LCD graphical display, Membrane Type User Control Push-buttons and easy to read LED Indicators for:
  - AC POWER AVAILABLE
  - ALARM
  - MAIN SWITCH IN AUTO
  - MAIN SWITCH IN MANUAL
  - SYSTEM PRESSURE LOW
  - ENGINE RUNNING
  - ENGINE FAIL TO START
  - ENGINE TEMPERATURE HIGH
  - ENGINE OIL PRESSURE LOW
  - ENGINE OVERSPEED
  - ENGINE ALTERNATE ECM
  - ENGINE FUEL INJECTOR MALFUNCTION
  - FUEL LEVEL LOW
  - AUTOMATIC SHUTDOWN DISABLED
  - CHARGER MALFUNCTION
  - BATTERY #1 TROUBLE
  - BATTERY #2 TROUBLE
- Minimum Run Timer / Off Delay Timer
- Programmable Daylight Saving Time Option
- Weekly Test Timer
- Engine Run Time Meter
- Digital Pressure Display
- USB Host Controller and Port
- Solid State Pressure Transducer
- Data Log
- Event Log (3000 events)
- Simultaneous Display of Battery Voltages, Charging Rates, AC Volts, Pressure and Alarm Messages
- Disk Error Message
- Disk Near Full Message
- Pressure Error Message
- Fail to Start Message
- Low Suction Pressure Message
- Crank Cycle Status Indication (Displays Cranking Battery, Number of Starting Attempts and Crank/Rest Time Remaining)
- 300 psi (20.7 bar) wet parts (solid state pressure transducer, solenoid valve, plumbing) for fresh water applications
- NEMA Type 2 enclosure (IEC IP22)
- Each standard controller comes with user set options for:
  - AC Power Loss Start
  - Interlock Alarm
  - Low Pressure Aud.
  - Low Suction
  - Main Sw. Mis-Set
  - Manual Test
  - Pump Run Alarm
  - Remote Start
  - User Defined Input
  - Weekly Test Setup
  - Low Pump Rm Temp
  - Low Reservoir
  - Relief Valve Open
  - High Fuel Level
  - High Reservoir
- Also included (as required) are Audible/Visible alarm notifications for:
  - Electronic Engine Control Module (ECM) Warning
  - Electronic Engine Control Module (ECM) Failure
  - Low Engine Temperature
  - High Raw Cooling Water Temperature
  - Low Raw Water Flow (Clogged Stainer)
  - Fuel Spill (Interstitial Space Liquid Intrusion)
  - Low Suction Pressure (At Variable Speed Suction Limiting Engine Controls)

Special Enclosures
- -E Enclosuer, NEMA Type 4 (IEC IP 66), Painted Steel
- -F Enclosure, NEMA Type 4X (IP66), #304 Stainless Steel, Brushed Finish
- -FD Enclosure, NEMA Type 4X (IP66), #316 Stainless Steel, Brushed Finish
- -FDB Enclosure, NEMA Type 4X (IP66), #316 Stainless Steel, 12 Gauge, Seam Welded, Brushed Finish
- -FDP Enclosure, NEMA Type 4X, #316 Stainless Steel, Painted Finish
- -FXP Enclosure, NEMA Type 4X (IP66), #304 Stainless Steel Painted Finish
- -G Enclosure, NEMA Type 12 (IP54), Painted Steel
- -T Enclosure, NEMA Type 3R (IP24), Painted Steel

Mounting Legs
- -N31 Mounting Legs, Standard 12 Inch, Painted Steel
- -N31S Mounting Legs, Standard 12 Inch, Stainless Steel

Anti-Condensation Space Heaters
- -H Space Heater, 120V Externally Powered with Circuit Breaker
- -J Space Heater, 120V Externally Powered with Circuit Breaker and Thermostat
- -K Space Heater, 120V Externally Powered with Circuit Breaker and Humidistat
- -L Space Heater, 240V Externally Powered with Circuit Breaker
- -M Space Heater, 240V Externally Powered with Circuit Breaker and Thermostat
- -N Space Heater, 240V Externally Powered with Citcuit Breaker and Humidistat

Pressure Transducers, Solenoid Valves, Plumbing
- -B Wetted Parts Including Pressure Sensor, 600 PSI (42 Bar), Fresh Water
- -C Wetted Parts Including Pressure Sensor, 300 PSI (21 Bar), Sea Water
- -D Wetted Parts Including Pressure Sensor, 600 PSI (42 Bar), Sea Water

Alarms
- -AC Alarm Output Contacts, Extra, Engine Running (3 Sets)
- -AJ Alarm Output Contacts, Engine Overspeed
- -AK Alarm Output Contacts, Low Oil Pressure
- -AL Alarm Output Contacts, High Water Temperature
- -AM Alarm Output Contacts, Fail To Start
- -AN Alarm Output Contacts, Battery / Charger Failure
- -AP Alarm Output Contacts, Main Switch In Manual
- -AR Alarm Output Contacts, Main Switch In Off
- -AS Alarm Output Contacts, Main Switch In Auto
- -AT Alarm Output Contacts, Pump Room Trouble[1]
- -AV Alarm Output Contacts, Low Pump Room Temperature[1]
- -AW Alarm Output Contacts, Reservoir Low[1]
- -AY Alarm Output Contacts, Low Suction Pressure[1]
- -COM Alarm, Audible/Visible/Output Contacts, Low Suction Pressure with Manual Reset Option. Pressure Switch Not Included[1]
- -CPL Alarm Output Contacts, Overpressure(for use with PLD engines only)
- -CTS Alarm, Audible/Visible/Output Contacts, Low Suction Pressure with Manual Reset Option and Pressure Switch
- -ECMFR Alarm Output Contacts, Electronic Engine ECM Failure
- -ECMWR Alarm Output Contacts, Electronic Engine ECM Warning
- -EE Alarm Output Contacts, Extra, Engine Trouble (1 Set)
- -EF Alarm Output Contacts, Extra, Main Switch Not In Auto (1 Set)
- -EH Alarm Output Contacts, Relief Valve Discharge[1]
- -EJ Alarm, Audible/Visible, Flow Meter On[1]
- -HRTR Alarm Output Contacts, High Raw Water Temperature
- -EK Alarm Output Contacts, Flow Meter On[1] (Requires option -EJ)
- -LETR Alarm Output Contacts, Low Engine Temperature
- -LRFR Alarm Output Contacts, Low Raw Water Flow (Clogged Strainer)
- -JR Visible Indicator, Jockey Pump Operating (Requires Jockey Pump To Be Ordered With Option -AC)
- -LSPR Alarm Output Contacts, Low Suction Pressure (at Variable Speed Suction Limiting Engine Controls)
- -JT Alarm, Audible/Visible, Jockey Pump Trouble (Requires Jockey Pump To Be Ordered With Option -KH)
- -LC Alarm Output Contacts, High Fuel Level[1]
- -LE Alarm Output Contacts, Fuel Spill
- -LG Alarm Output Contacts, Reservoir High[1]
- -PE Alarm Output Contacts, Low System Pressure (Pump On Demand)

Miscellaneous
- -AZ Thermostat, Low Pump Room Temperature, Mounted and Wired
- -BA AC Input, 220-240V
- -EL Series Pumping Operation, High Zone Controller
- -EM Series Pumping Operation, Mid Zone Controller
- -EN Series Pumping Operation, Low Zone Controller
- -IEC Marking, CE With External Wet Parts (Requires NEMA Type 12/IP54 enclosure as minimum)
- -IECI Marking, CE With Internal Wet Parts (Requires NEMA Type 12/IP54 enclosure as minimum)
- -OSP Marking, OSHPD Seismic Cerrtification, State of California (Requires Option -SEI)
- -S Tropicalization
- -SEI Marking, Seismic Certified (in accordance with IBC)
- -USBX Data Port, External USB
- -ZPA Scheduled Service Message
- -ZPM Data Port, Serial Modbus RTU Over 2-Wire or 4-Wire RS485
- -ZPN Data Port, Serial Modbus RTU Over Ethernet TCP/IP

FTA1100-K1 Low fuel level switch, 16" max insertion length[2]
FTA1100-K1-X High/Low fuel level switch - specify levels/tank dimensions
FTA1100-K2 Low fuel level switch, 25" max. insertion length[2]
FTAK21 380-480 volt operation (transformer)[2]
Export packaging (Wooden crating to conform to IPPC Standards)

[1] - Initiating switches by others
[2] - Shipped loose for installation by the customer

Firetrol, Inc.
3412 Apex Peakway
Apex, North Carolina 27502
P +1 919 460 5200
F +1 919 460 5250
www.firetrol.com

Model Number selection Guide
FTA1100J

Mark IIxG Diesel Engine Fire Pump Controller

FTA1100-J _ __ N- __ (Example: FTA1100-JL24N-G-AM)

Controller Type
J - Mark IIxG

Battery Type
L - Lead Acid
N - Ni-Cad

Battery Voltage
12 - 12 Volt DC
24 - 24 Volt DC

System Ground
N - Negative Ground

Options and Modifications

Special Enclosures

-T NEMA Type 3R (IEC IP22), Painted Steel
-E NEMA Type 4 (IEC IP 66), Painted Steel
-F NEMA Type 4X (IEC IP66) #304 Stainless Steel, Brushed Finish
-FXP NEMA Type 4X (IEC IP66) #304 Stainless Steel, Painted Finish
-FD NEMA Type 4X (IEC IP66) #316 Stainless Steel, Brushed Finish
-FDB NEMA Type 4X (IEC IP66) #316 Stainless Steel, 12 Gauge, Seam Welded, Brushed Finish
-FDP NEMA Type 4X (IEC IP66) #316 Stainless Steel, Painted Finish
-G NEMA Type 12 (IEC IP54)

Mounting Legs

-N31 Standard 12" Mounting Legs
-N31S 12" Mounting Legs, Stainless Steel

Anti-Condensation Space Heaters

-H 120 Volt Space Heater
-J 120 Volt Space Heater with Thermostat
-K 120 Volt Space Heater with Humidistat
-L 240 Volt Space Heater
-M 240 Volt Space Heater with Thermostat
-N 240 Volt Space Heater with Humidistat

Pressure Transducers, Solenoid Valves, Plumbing

-B 0-600 psi (0-41.4 bars) wet parts for fresh water applications
-C 0-300 psi (0-20.7 bars) wet parts for copper corrosive applications
-D 0-600 psi (0-41.4 bars) wet parts for copper corrosive applications

Continued on other side

Alarms

-AC Additional contacts for remote indication, engine running - 2 sets provided as standard
-AJ Contacts for remote indication, engine overspeed
-AK Contacts for remote indication, low oil pressure
-AL Contacts for remote indication, high water temperature
-AM Contacts for remote indication, engine failed to start
-AN Contacts for remote indication, battery / charger failure
-AP Contacts for remote indication, main switch in manual
-AR Contacts for remote indication, main switch in off
-AS Contacts for remote indication, main switch in auto
-AT Contacts for remote indication, pump room trouble[1]
-AV Contacts for remote indication, low pump room temperature[1]
-AW Contacts for remote indication, reservoir low[1]
-AY Contacts for remote indication, low suction pressure[1]
-COM Visible low suction pressure alarm, Manual reset only (Includes reset push-button, initiating pressure switch not included)[1]
-CPL Contacts for remote indication, system 115% over pressure (for use with PLD engines only)
-CTS Built-in low suction pressure alarm panel (Includes selectable auto/manual reset, audible, visible and remote alarms and mounted and wired pressure switch)
-EE Additional contacts for remote indication, engine trouble - 1 set provided as standard
-EF Additional contacts for remote indication, main switch mis-set - 1 set provided as standard
-EH Contacts for remote indication, relief valve discharge[1]
-EJ Audible & Visible flow meter on alarm[1]
-EK Contacts for remote indication, flow meter on[1] (Requires option -EJ)
-JR Visible jockey pump running indication
-JT Audible and visible jockey pump trouble indication
-LC Contacts for remote indication, high fuel level[1]
-LD Audible & Visible fuel spill alarm[1]
-LE Contacts for remote indication, fuel spill[1] (Requires option -LD)
-LG Contacts for remote indication, reservoir high[1]
-PE Contacts for remote indication, low system pressure (Pump On Demand)

Miscellaneous

-AZ Low pump room temperature switch, mounted and wired
-BA 220-240 Volt operation
-EL Series pumping, high zone controller
-EM Series pumping, mid zone controller
-EN Series pumping, low zone controller
-IEC CE Marking with Externally Mounted Wet Parts (Requires NEMA Type 12/IP54 enclosure as a minimum)
-IECI CE Marking (Internal Wet Parts) (Requires NEMA Type 12/IP54 enclosure as a minimum)
-OSP OSHPD Seismic Certification (State of California) (Requires Option -SEI)
-S Tropicalization
-SEI Seismic Certification (in accordance with IBC)
-USBX External USB Port
-ZPA Customized, annual service display message (factory programmed)
-ZPN Serial Modbus RTU over Ethernet TCP/IP using 5150 Connectivity Module
-ZPM Serial Modbus RTU over 2-wire or 4-wire RS485

FTA1100-K1 Low fuel level switch, 16" max insertion length[2]
FTA1100-K1-X High/Low fuel level switch - specify levels/tank dimensions
FTA1100-K2 Low fuel level switch, 25" max. insertion length[2]
FTAK21 380-480 volt operation (transformer)[2]
Export packaging (Wooden crating to conform to IPPC Standards)

[1] - Initiating switches by others
[2] - Shipped loose for installation by the customer

Firetrol, Inc.
3412 Apex Peakway
Apex, North Carolina 27502
P +1 919 460 5200
F +1 919 460 5250
www.firetrol.com

Publication SD1100-50 Rev. F

Dimensions & Shipping Weight

FTA1100J
Wall Mount

Mark IIXG Diesel Engine Fire Pump Controllers

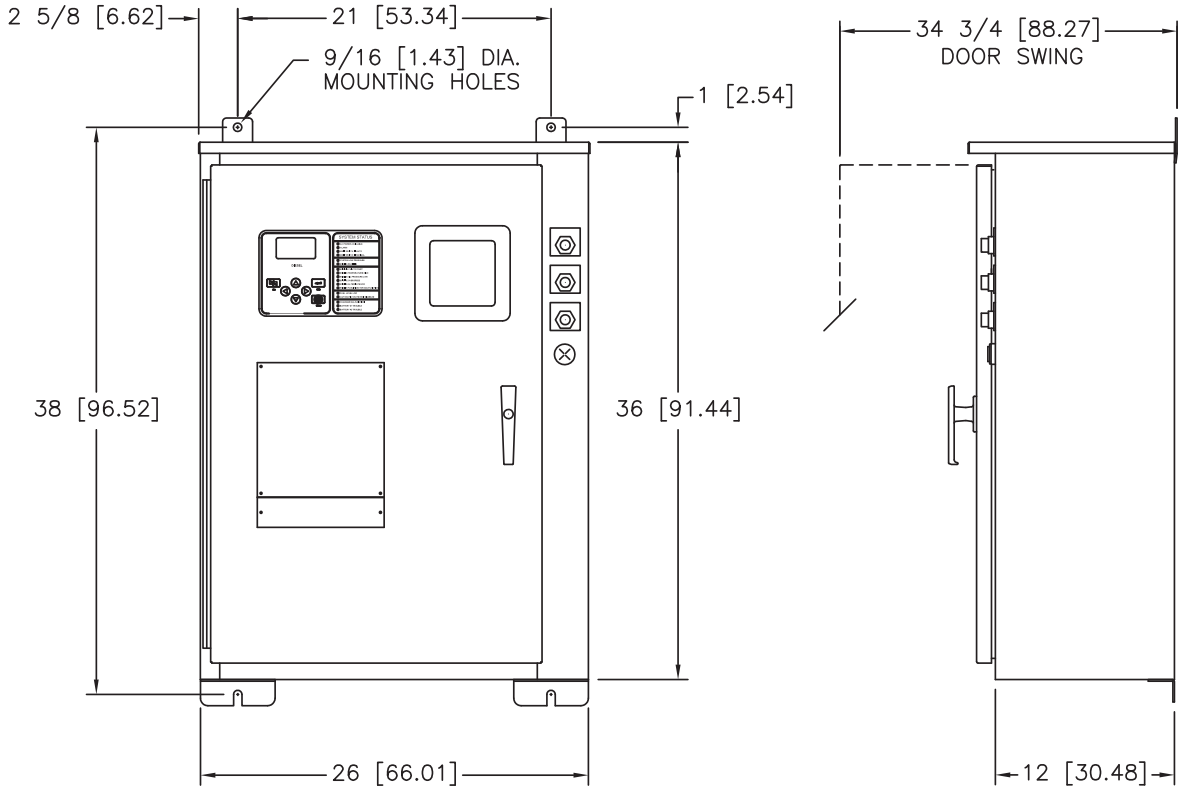

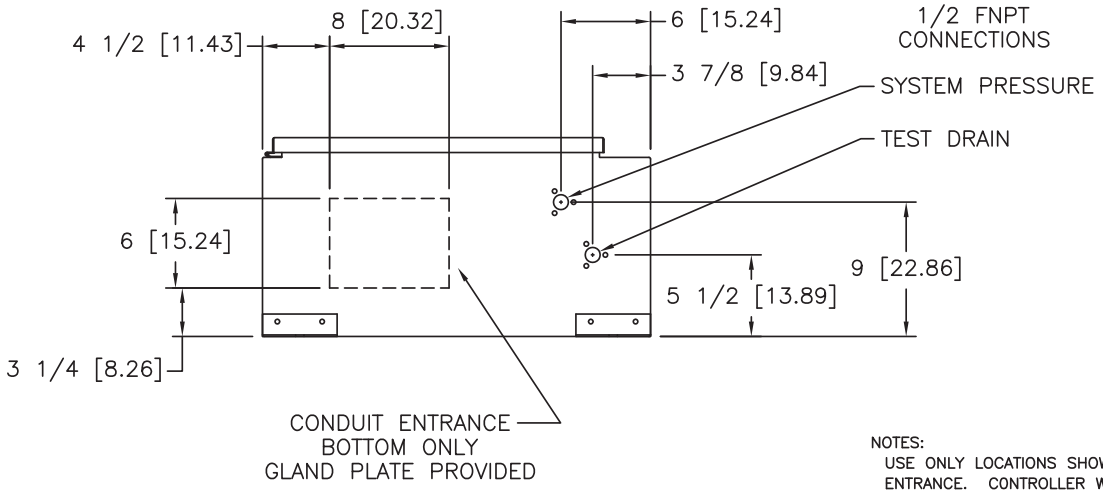

NOTES:

USE ONLY LOCATIONS SHOWN FOR CONDUIT ENTRANCE. CONTROLLER WARRANTY IS VOID IF ANY OTHER LOCATION IS USED. DO NOT ENTER FROM TOP.

NOT TO BE USED AS A JUNCTION BOX. DO NOT ROUTE ENGINE HEATER WIRING THROUGH CONTROLLER.

DO NOT INSTALL IN AMBIENT TEMPERATURES BELOW 41°F (5°C)

DIMENSIONS SHOWN ON THIS DRAWING ARE APPLICABLE FOR NEMA TYPES 2/3R/4/4X/12

FOR CONTROLLERS WITH 12" [30.5] FLOOR MOUNTING LEGS MODIFICATION –N31 RE: DRAWING DD1100–21

FOR CONTROLLERS WITH 6" [15.24] BASE MOUNTING LEGS MODIFICATION –N32 RE: DRAWING DD1100–22

ALL DIMENSIONS – INCHES [CM]
SHIPPING WEIGHT – POUNDS [KG]

APPROXIMATE SHIPPING WEIGHT
200 [90.7]

REVISION DESCRIPTION	REV	ECN NO	BY	APP	DATE
UPDATED TITLE BLOCK	D	280454	JMW	TEF	08-21-19
CHANGED PRESSURE FITTING AND CONDUIT ENTRANCE DIMENSIONS	C	228698	JC	TEF	08-20-10

	SIZE A	BY	DATE
THIRD ANGLE PROJECTION	DRAWN BY	TEF	12-14-02
	FINAL APPROVAL	TEF	12-14-02

Firetrol, Inc.

DIMENSIONS & SHIPPING WEIGHT — FTA1100-J

DIESEL ENGINE FIRE PUMP CONTROLLER
WALL MOUNT

DRAWING NUMBER DD1100-20

DWG REV D | ECN NO 280454 | SHEET 1 OF 1

Dimensions & Shipping Weight

FTA1100J

Mark IIXG Diesel Engine Fire Pump Controllers

With Modification N31 (12" Mounting Legs)

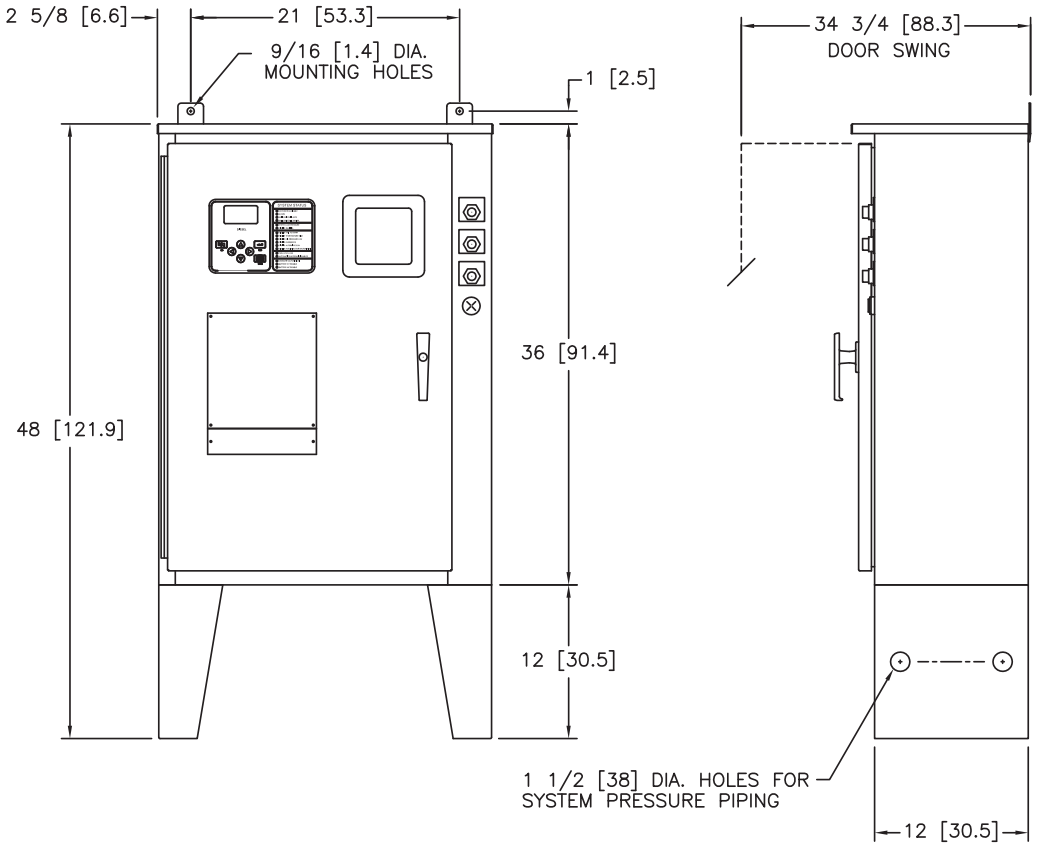

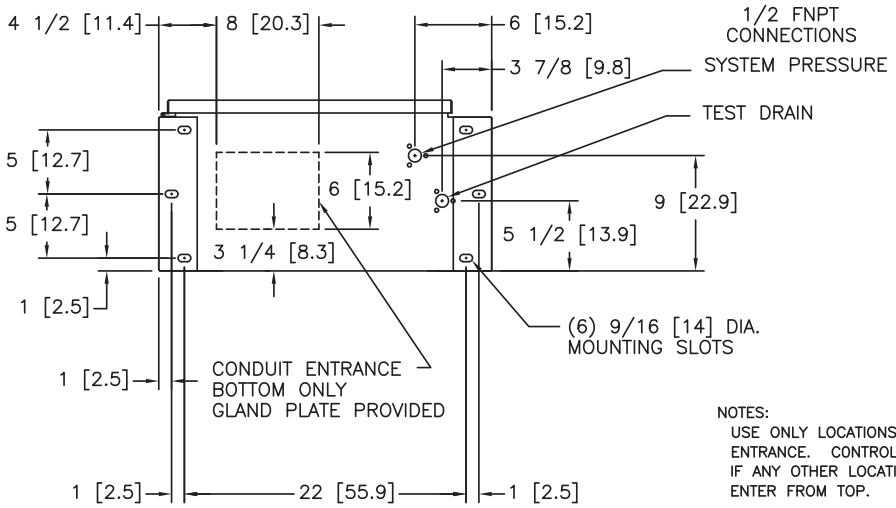

NOTES:

USE ONLY LOCATIONS SHOWN FOR CONDUIT ENTRANCE. CONTROLLER WARRANTY IS VOID IF ANY OTHER LOCATION IS USED. DO NOT ENTER FROM TOP.

NOT TO BE USED AS A JUNCTION BOX. DO NOT ROUTE ENGINE HEATER WIRING THROUGH CONTROLLER.

DO NOT INSTALL IN AMBIENT TEMPERATURES BELOW 41°F (5°C)

DIMENSIONS SHOWN ON THIS DRAWING ARE APPLICABLE FOR NEMA TYPES 2/3R/4/4X/12

ALL DIMENSIONS – INCHES [CM]
SHIPPING WEIGHT – POUNDS [KG]

APPROXIMATE SHIPPING WEIGHT
200 [90.7]

REVISION DESCRIPTION	REV	ECN NO	BY	APP	DATE
UPDATED TITLE BLOCK	C	280454	JMW	TEF	08-21-19
CHANGED PRESSURE FITTING AND CONDUIT ENTRANCE DIMENSIONS	B	228698	JC	TEF	08-20-10

	SIZE	BY	DATE
THIRD ANGLE PROJECTION	A		
	DRAWN BY	RW	11-17-03
	FINAL APPROVAL	TEF	11-17-03

Firetrol, Inc.

DIMENSIONS & SHIPPING WEIGHT | FTA1100-J

DIESEL ENGINE FIRE PUMP CONTROLLER
WITH MODIFICATION N31 (12" MOUNTING LEGS)

DRAWING NUMBER DD1100-21

DWG REV C | ECN NO 280454 | SHEET 1 OF 1

Dimensions & Shipping Weight

FTA1100J

Mark IIXG Diesel Engine Fire Pump Controllers

With Modificaton N32 (8" Base Mounting Legs)

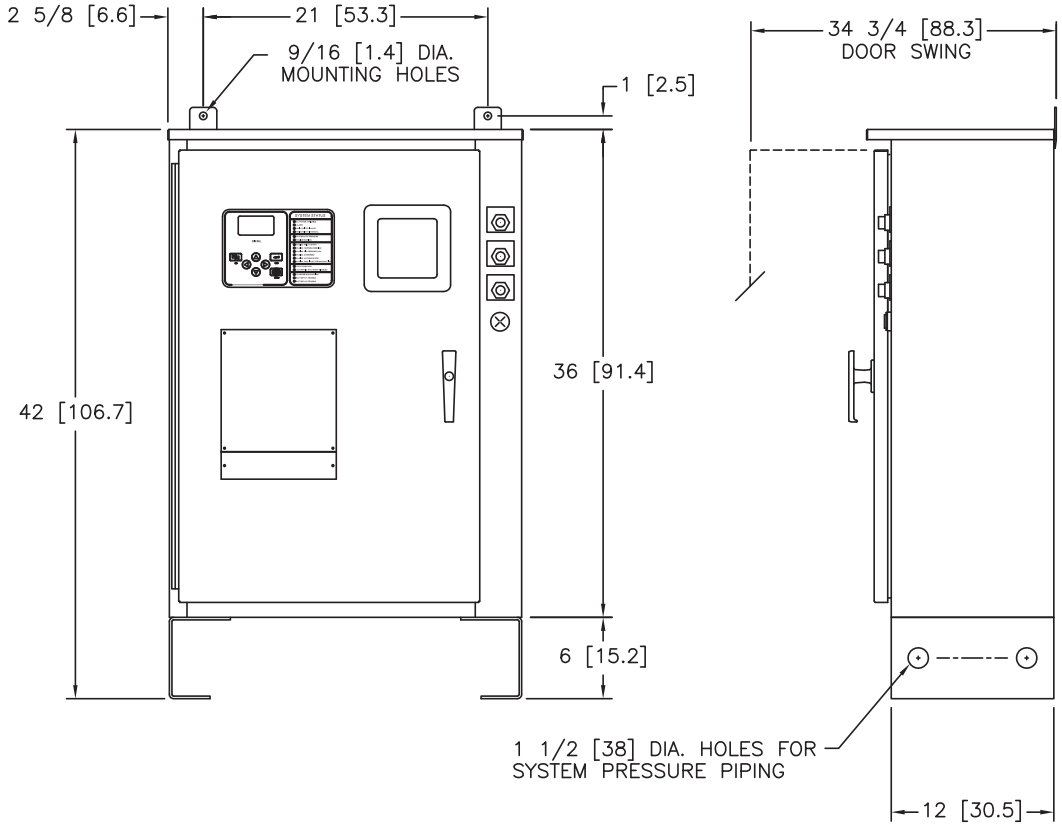

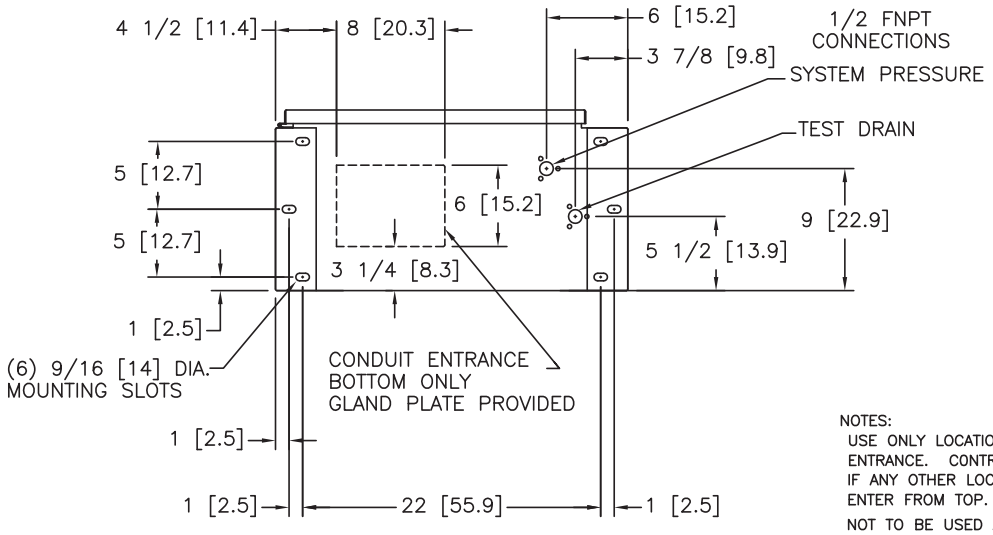

NOTES:

USE ONLY LOCATIONS SHOWN FOR CONDUIT ENTRANCE. CONTROLLER WARRANTY IS VOID IF ANY OTHER LOCATION IS USED. DO NOT ENTER FROM TOP.

NOT TO BE USED AS A JUNCTION BOX. DO NOT ROUTE ENGINE HEATER WIRING THROUGH CONTROLLER.

DO NOT INSTALL IN AMBIENT TEMPERATURES BELOW 41°F (5°C)

DIMENSIONS SHOWN ON THIS DRAWING ARE APPLICABLE FOR NEMA TYPES 2/3R/4/4X/12

ALL DIMENSIONS – INCHES [CM]
SHIPPING WEIGHT – POUNDS [KG]

APPROXIMATE SHIPPING WEIGHT
200 [90.7]

REVISION DESCRIPTION	REV	ECN NO	BY	APP	DATE
UPDATED TITLE BLOCK	D	280454	JMW	TEF	08-21-19
CHANGED PRESSURE FITTING AND CONDUIT ENTRANCE DIMENSIONS	C	228698	JC	TEF	08-20-10

	SIZE	BY	DATE
THIRD ANGLE PROJECTION	A		
	DRAWN BY	RW	01-17-03
	FINAL APPROVAL	TEF	01-17-03

Firetrol, Inc.

DIMENSIONS & SHIPPING WEIGHT | FTA1100-J

DIESEL ENGINE FIRE PUMP CONTROLLER
WITH MODIFICATION N32 (6" BASE MOUNTING LEGS)

DRAWING NUMBER DD1100-22

DWG REV C | ECN NO 280454 | SHEET 1 OF 1

Firetrol

Mark IIXG Diesel Engine Fire Pump Controllers

Field Connections

FTA1100J

–WIRE SIZES–
COPPER CONDUCTORS ONLY

USE #14 AWG WIRE [16 MWG] MINIMUM FOR ALL ELECTRICAL CONNECTIONS EXCEPT FOR BATTERY CHARGER CONNECTIONS. (BATTERY CHARGERS CONNECTED TO TERMINALS 6, 8 AND 11) ON TERMINALS 6, 8 AND 11 USE THE FOLLOWING INFORMATION TO DETERMINE WIRE SIZES:

LINEAR FEET (IN CONDUIT RUN) FROM CONTROLLER TO TERMINAL BLOCK ON ENGINE	MINIMUM WIRE SIZE
0' – 25' (7.63m) 25' – 50' [7.62m – 15.24m]	#10 AWG [6 MM^2] #8 AWG [10 MM^2]

TERMINALS AND TIGHTENING TORQUE		
TERMINAL TYPE	WIRE SIZE	TIGHTENING TORQUE
POWER TERMINALS 45 AMP (G, 1–12)	#14–8 AWG [2.5–10 MM^2]	14.2 in–lb [1.6 Nm]
CONTROL AND ALARM TERMINALS (TB2, TB3)	#14–12 AWG [2.5–4 MM^2]	5.6 in–lb [.6 Nm]
CONTROL AND ALARM TERMINALS (301–312)	#14–12 AWG [2.5–4 MM^2]	7.1 in–lb [.8 Nm]
CIRCUIT BREAKERS	#14–4 AWG [2.5–25 MM^2]	17.5 in–lb [2 Nm]

–NOTES–

1. IF CONTROLLER IS ARRANGED FOR OPERATION ON 220–240 VOLTS (MODIFICATION –BA) CONNECT TO THESE TERMINALS
2. TERMINAL G MUST BE WIRED TO INCOMING LINE BONDED GROUND. REFER TO ARTICLE 250, ***NATIONAL ELECTRICAL CODE,*** NFPA70.
3. TERMINALS 1 THRU 12, 301 THRU 305, & 310 THRU 312 CONNECT TO LIKE NUMBERED TERMINALS ON THE ENGINE TERMINAL BLOCK. SOME ENGINES MAY NOT USE ALL TERMINALS. REFER TO ENGINE MANUFACTURER'S WIRING DIAGRAM FOR CORRECT CONNECTIONS.
4. ENGINE TROUBLE ALARM CIRCUITS OPERATE IF ANY ONE OR MORE OF THE FOLLOWING TROUBLES OCCUR: ENGINE OVERSPEED, LOW OIL PRESSURE, HIGH WATER TEMPERATURE, BATTERY CHARGER OR BATTERY FAILURE, FAILED TO START, AND STARTING CONTACTOR COIL FAILURE. ELECTRONIC ENGINE ALARMS (TERMINALS 301–312) ARE FIELD PROGRAMMABLE FOR INCLUSION IN ENGINE TROUBLE ALARM.
5. SPARE TERMINAL PROVIDED FOR PARALLEL CONNECTION OF REMOTE ALARMS (IF REQUIRED).
6. COMMON TROUBLE ALARM CIRCUIT OPERATES WHEN ANY ALARM OCCURS.

–GENERAL NOTES–

ALL ALARM CONTACTS ARE RATED FOR PILOT CIRCUIT DUTY, 250 VAC, 30 VDC MAXIMUM, 10 AMPERES, NON–INDUCTIVE.

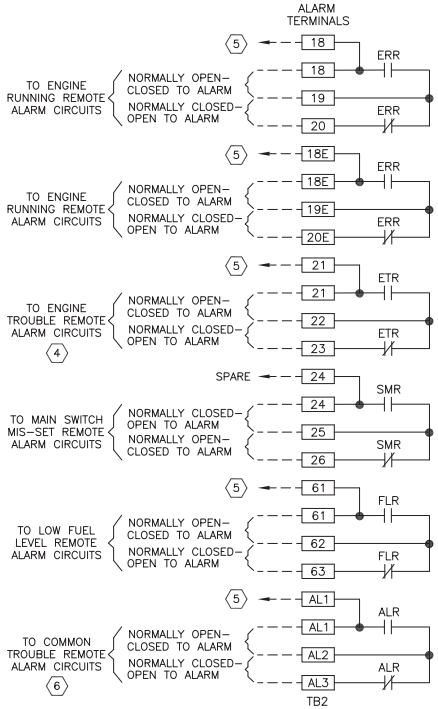

PRESSURE SYSTEM CONNECTION 1/2" FNPT

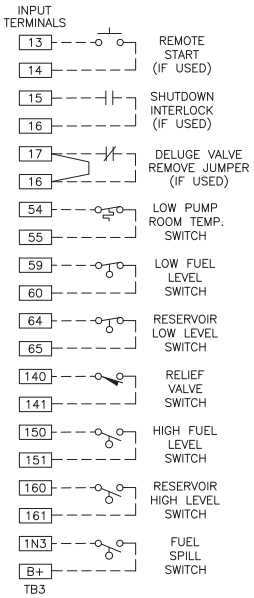

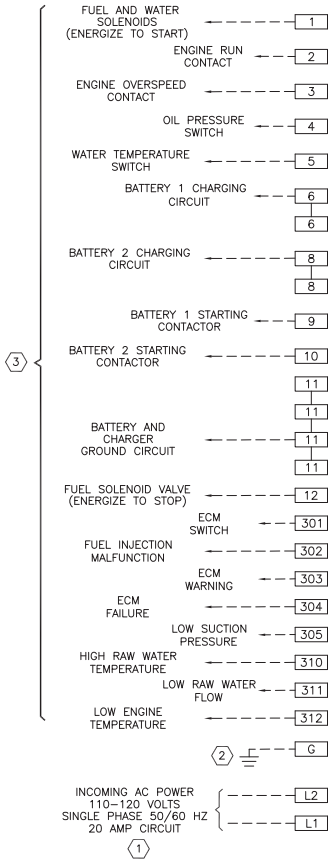

THIS FIELD CONNECTION DIAGRAM IS FOR DIESEL ENGINES LISTED FOR DRIVING CENTRIFUGAL FIRE PUMPS SUPPLIED BY THE FOLLOWING MANUFACTURERS:

CATERPILLAR, INC., ENGINE DIVISION, PEORIA, IL
CLARKE DETROIT DIESEL–ALLISON, INC. CINCINNATI, OH
CUMMINS ENGINE CO., INC., COLUMBUS, IN
DEUTZ CORP., NORCROSS, GA.
KIRLOSKAR CUMMINS, LTD., PUNE, INDIA

FOR ENGINES OR MANUFACTURERS NOT LISTED ABOVE, CONSULT THE FACTORY.

REVISION DESCRIPTION	REV	ECN NO	BY	APP	DATE
UPDATED TITLE BLOCK	F	280454	JMW	TEF	08-26-19
REVISED PER FM & NFPA-20 ADD'L ALARM REQUIREMENTS	E	255410	GFD	GFD	06-19-15

THIRD ANGLE PROJECTION	SIZE A	BY	DATE
	DRAWN BY	TEF	12-14-02
	FINAL APPROVAL	TEF	12-14-02

Firetrol, Inc.

FIELD CONNECTIONS — FTA1100-J

MARK II DIESEL ENGINE FIRE PUMP CONTROLLER STANDARD FIELD CONNECTIONS

DRAWING NUMBER FC1100-20

DWG REV F — ECN NO 280454 — SHEET 1 OF 1

Firetrol

Mark IIXG Diesel Engine Fire Pump Controllers

Wiring Schematic

FTA1100J

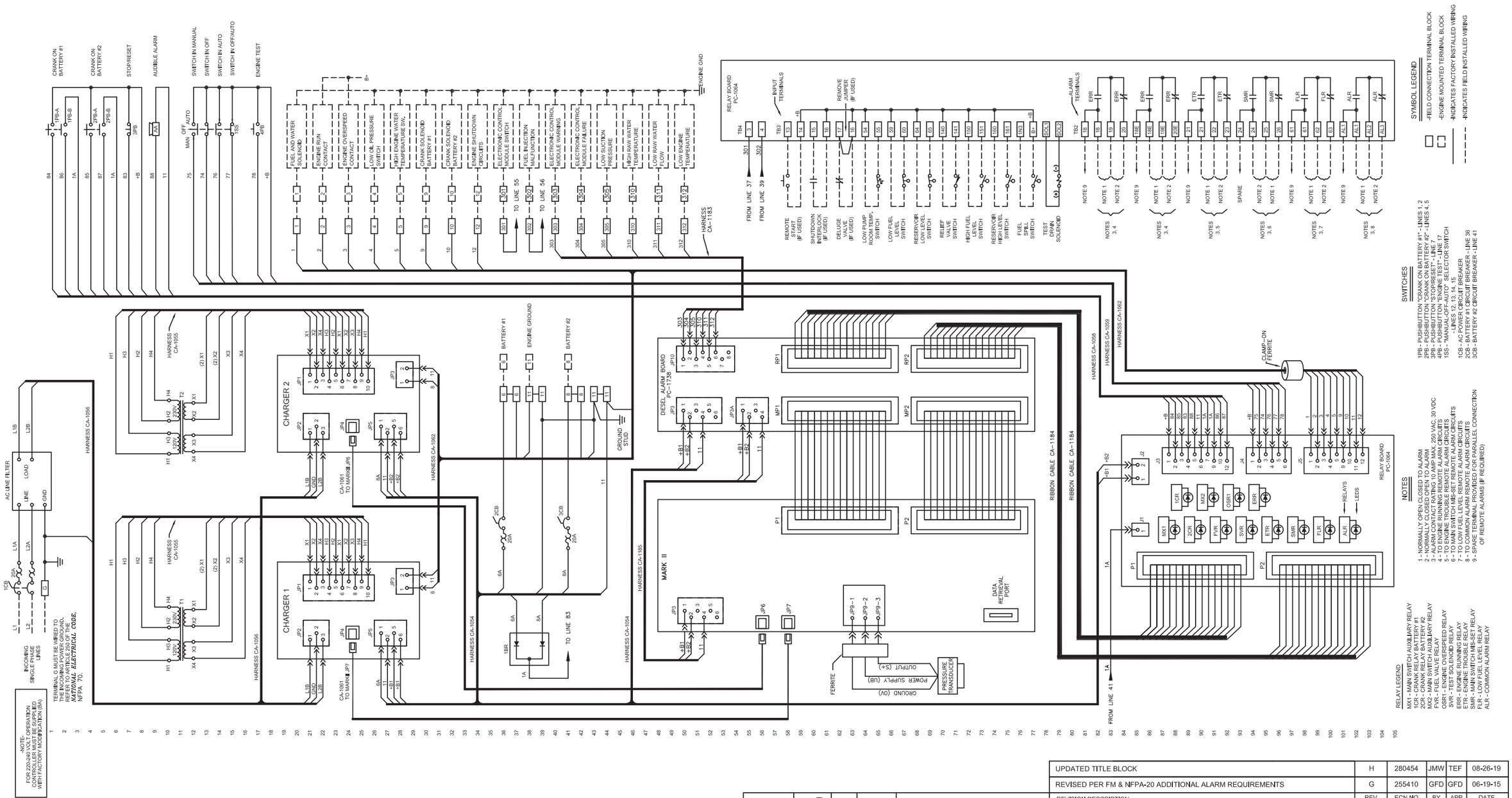

REV	ECN NO	BY	APP	DATE
H	280454	JMW	TEF	08-26-19
G	255410	GFD	GFD	06-19-15

REVISION DESCRIPTION: UPDATED TITLE BLOCK; REVISED PER FM & NFPA-20 ADDITIONAL ALARM REQUIREMENTS

	SIZE	BY	DATE
	B		
DRAWN BY		TEF	11-04-02
FINAL APPROVAL		TEF	11-04-02

THIRD ANGLE PROJECTION

Firetrol, Inc.

WIRING SCHEMATIC — FTA1100--J

MARK II DIESEL ENGINE FIRE PPUMP CONTROLLER STANDARD WIRING SCHEMATIC

DRAWING NUMBER WS1100-20

DWG REV H — ECN NO 280454 — SHEET 1 OF 1