Submittal Package
FTA1300 / FTA950
Wye-Delta Open Transition Starting
With Power Transfer Switch

STANDARD WITHSTAND RATINGS 200–600V – 100,000 Amps RMS Sym. INTERMEDIATE WITHSTAND RATINGS 200–600V – 150,000 Amps RMS Sym. HIGH WITHSTAND RATINGS 200–600V – 200,000 Amps RMS Sym.	
LINE VOLTAGE	**MOTOR HORSEPOWER**
200	☐ 75–100
208	☐ 75–125
220–240	☐ 75–125
380–415	☐ 125–200
440–480	☐ 200–250
550–600	☐ 200–300

(DRAWINGS INCLUDED IN THIS PACKAGE ARE FOR STANDARD CONTROLLERS. ACTUAL "AS BUILT" DRAWINGS MAY DIFFER FROM THOSE SEEN HERE).

Firetrol, Inc.
3412 Apex Peakway
Apex, North Carolina 27502
P 919 460-5200
F 919 460 5250
www.firetrol.com

While every precaution has been taken to ensure accuracy and completeness herein, Firetrol, Inc. assumes no responsibility, and disclaims all liability, for damages resulting from use of this information or for any errors or omissions. Specifications and drawings are subject to change without notice. ©2019 Firetrol, Inc., All Rights Reserved.

Publication SBP1300-63 Rev. J

Firetrol Mark IIXG Electric Fire Pump Controller

FTA1300 - Wye-Delta Open Transition Starting

Specifications

1.0 Main Fire Pump Controller

The main fire pump controller shall be a factory assembled, wired and tested unit. The controller shall be of the combined manual and automatic type designed for wye-delta open transition starting of the fire pump motor having the horsepower, voltage, phase and frequency rating shown on the plans and drawings.

1.1 Standards, Listings & Approvals

The controller shall conform to all the requirements of the latest editions of:
NFPA 20, *Standard for the Installation of Stationary Pumps for Fire Protection*
NFPA 70, *National Electrical Code*

The controller shall be listed by:
Underwriters Laboratories, Inc., in accordance with UL218, *Standard for Fire Pump Controllers* Canadian Standards Association CSA-C22.2, *Standard for Industrial Control Equipment* (cUL)
CE - Low Voltage Directive

The controller shall be approved by:
Factory Mutual (IEC 62091)
The City of New York for fire pump service

1.2 Enclosure

The controller components shall be housed in a NEMA Type 2 (IEC IP22) drip-proof, wall mounted enclosure.

1.3 Withstand Ratings (Short Circuit Current Ratings)

All controller components shall be front mounted, wired and front accessible for maintenance. The minimum withstand rating of the controllers shall not be less than 100,000 Amps RMS Symmetrical at 200-600 Volts*. If the available system fault current exceeds these ratings, the controllers shall be supplied with a withstand rating of 150,000 or 200,000 Amps RMS Symmetrical, as required.

*Note: 100,000 Amp withstand rating not available in some larger horsepowers. Consult factory for details.

1.4 Isolation Switch and Circuit Breaker

The controller shall include a motor rated combination isolating disconnect switch/circuit breaker, mechanically interlocked and operated with a single, externally mounted handle. When moving the handle from OFF to ON, the interlocking mechanism shall sequence the isolating disconnect switch ON first, and then the circuit breaker. When the handle is moved from ON to OFF, the interlocking mechanism shall sequence the circuit breaker OFF first, and then the isolating disconnect switch.

The isolating disconnect switch/circuit breaker shall be mechanically interlocked so that the enclosure door cannot be opened with the handle in the ON position except by a hidden tool operated bypass mechanism. The isolating disconnect switch/circuit breaker shall be capable of being padlocked in the OFF position for installation and maintenance safety, and shall also be capable of being locked in the ON position without affecting the tripping characteristics of the circuit breaker. The controller door shall have a locking type handle and three point cam and roller vault type hardware. The circuit breaker trip curve adjustment shall be factory set, tested and sealed for the full load amps of the connected motor. The circuit breaker shall be capable of being

field tested to verify actual pick up, locked rotor, and instantaneous trip points after field installation without disturbing incoming line and load conductors.

1.5 Operator Interface

The fire pump controller shall feature an operator interface with user keypad. The interface shall monitor and display motor operating conditions, including all alarms, events, and pressure conditions. All alarms, events, and pressure conditions shall be displayed with a time and date stamp. The display shall be a 128x64 Backlit LCD capable of customized graphics. The display and interface shall be NEMA rated for Type 2, 3R, 4, 4X, and 12 protection and shall be fully accessible without opening the controller door. The display and user interface shall utilize multiple levels of password protection for system security. A minimum of 3 password levels shall be provided.

1.6 Ammeter/Voltmeter

The fire pump controller operator interface shall be capable of displaying true RMS digital motor voltage and current measurements for all three phases simultaneously. Displays requiring push-button and selector switches to toggle between phases or current and voltage shall not be accepted.
Voltage and current shall be measured by True RMS technology to provide the most accurate measurement for all sine waves, including non-sinusoidal waveforms. Average responding meters will not be accepted.

1.7 Digital Status/Alarm Messages

The digital display shall indicate text messages for the status and alarm conditions of:

- Motor On
- Local Start / Off Delay Time
- Fail to Start
- Over Voltage
- Emergency Start
- Motor Overload
- Disk Near Full
- Sequential Start Time
- System Battery Low
- Locked Rotor Trip
- Motor Over 320%
- Disk Error
- Pressure Error
- Minimum Run Time
- Remote Start
- Under Voltage
- Over Frequency
- Drive Not Installed
- Printer Error

The Sequential Start Timer and Minimum Run Timer/Off Delay Timer shall be displayed as numeric values reflecting the value of the remaining time.

1.8 LED Visual Indicators

LED indicators, visible with the door closed, shall indicate:

- Power Available
- Remote Start
- Transfer Switch Emergency
- Phase Reversal
- Motor Overload
- Overvoltage
- Alarm• Pump Running
- Transfer Switch Normal
- Interlock On
- Emerg. Iso. Switch Off
- Undervoltage
- System Pressure Low
- Deluge Open
- Phase Failure
- Fail To Start
- Automatic Shutdown Disabled

1.9 Data Logging

The digital display shall monitor the system and log the following data:

- Motor Calls/Starts
- Total Controller Pwr On Time
- Min/Max System Pressure
- Last Locked Rotor Trip
- Max Starting Currents
- Pump Total Run Time
- Last Locked Rotor Current
- Max Run Currents
- Pump Last Run Time
- Last Pump Start
- Last Phase Fail/Reversal
- Min/Max Frequency
- Min/Max Voltage per Phase while idle (not running)
- Min Voltage per Phase during Start
- Min/Max Voltage per Phase during Run

2.0 Event Recording

Memory - The controller shall record all operational and alarm events to system memory. All events shall be time and date stamped and include an index number. The system memory shall have the capability of storing 3000 events and allow the user access to the event log via the user interface. The user shall have the ability to scroll through the stored messages in groups of 1 or 10.

2.1 USB Host Controller

The controller shall have a built-in USB Host Controller. A USB port capable of accepting a USB Flash Memory Disk shall be provided. The controller shall save all operational and alarm events to the flash memory on a daily basis. Each saved event shall be time and date stamped. The total amount of historical data saved shall solely depend on the size of the flash disk utilized. The controller shall have the capability to save settings and values to the flash disk on demand via the user interface.

2.2 Serial Communications

The controller shall feature a RS485 serial communications port for use with 2 or 4 wire Modbus RTU communications.

2.3 Solid State Pressure Transducer

The controller shall be supplied with a solid state pressure transducer with a range of 0-300 psi (0-20.7 bar) ±1 psi. The solid state pressure switch shall be used for both display of the system pressure and control of the fire pump controller. Systems using analog pressure devices or mercury switches for operational control will not be accepted.
The START, STOP and SYSTEM PRESSURE shall be digitally displayed and adjustable through the user interface. The pressure transducer shall be mounted inside the controller to prevent accidental damage. The pressure transducer shall be directly pipe mounted to a bulkhead pipe coupling without any other supporting members. Field connections shall be made externally at the controller coupling to prevent distortion of the pressure switch element and mechanism.

2.4 Seismic Certification

The controller shall be certified to meet or exceed the requirements of the 2012 International Building Code and the 2013 California Building Code for Importance Factor 1.5 Electrical Equipment for Sds equal to 1.88 or less severe seismic regions. Qualifications shall be based upon successful tri-axial shake-table testing in accordance with ICC-ES AC-156. Certification without testing shall be unacceptable. Controller shall be clearly labeled as rated for installation in seismic areas and a Certificate of Conformance shall be provided with the controller.
NOTE: Not available on Model FTA1500 Controllers

2.5 Controller Operation

A digitally set On Delay (Sequential Start) timer shall be provided as standard. Upon a call to start, the user interface shall display a message indicating the remaining time value of the On Delay timer.

The controller shall be field programmable for manual stop or automatic stop. If set for automatic stopping, the controller shall allow the user to select either a Minimum Run Timer or an Off Delay Timer. Both timers shall be programmable through the user interface.

A nonadjustable restart delay timer shall be provided to allow the residual voltage of the motor to decay prior to restarting the motor. At least 2 seconds, but no more than 3 seconds, shall elapse between stopping and restarting the pump motor.

A weekly test timer shall be provided as standard. The controller shall have the ability to program the time, date, and frequency of the weekly test. In addition, the controller

shall have the capability to display a preventative maintenance message for a service inspection. The message text and frequency of occurrence shall be programmable through the user interface.

A Lamp Test feature shall be included. The user interface shall also have the ability to display the status of the system inputs and outputs.

An Audible Test feature shall be included to test the operation of the audible alarm device.

The controller shall not start the fire pump motor under a single-phase condition. If the motor is already running when a phase loss occurs, the controller shall continue to run the motor, but still display a Phase Failure alarm.

The fire pump controller software shall be automatically upgraded through the USB port by simply inserting a flash disk with the new software. Fire pump controllers that require laptop computers, handheld equipment or specialized devices for software upgrades shall be prohibited.

2.6 Manufacturer

The controller shall be a Firetrol brand.

3412 Apex Peakway
Apex, North Carolina 27502
P +1 919 460 5200
F +1 919 460 5250
www.firetrol.com

Firetrol™, Inc.

While every precaution has been taken to ensure accuracy and completeness herein, Firetrol, Inc. assumes no responsibility, and disclaims all liability, for damages resulting from use of this information or for any errors or omissions. Specifications and drawings are subject to change without notice. ©2019 Firetrol, Inc., All Rights Reserved.

Publication SP1300-50 Rev. G

Automatic Power Transfer Switch for use with Electric Fire Pump Controller

FTA950

Specifications

1.0 Main Fire Pump Controller with Transfer Switch

The main fire pump controller with transfer switch shall be a factory assembled, wired and tested as a single unit. The controller shall be of the combined manual and automatic type designed for full voltage starting of the fire pump motor having the horsepower, voltage, phase and frequency rating shown on the plans and drawings.

1.1 Standards, Listings & Approvals

The controller with transfer switch shall conform to all the requirements of the latest editions of:
NFPA 20, *Standard for the Installation of Stationary Pumps for Fire Protection*
NFPA 70, *National Electrical Code*

The controller with transfer switch shall be approved by:
Factory Mutual

The controller with transfer switch shall be listed by:
Underwriters Laboratories, Inc., in accordance with UL218, *Standard for Fire Pump Controllers* Canadian Standards Association CSA-C22.2, *Standard for Industrial Control Equipment* (cUL)

1.2 Enclosure

The power transfer switch shall be housed within the fire pump controller enclosure or in a NEMA Type 2 (IEC IP22) drip-proof enclosure attached directly to the fire pump controller. Where the power transfer switch is provided in an attached enclosure, the enclosures shall be fitted so that the assembly constitutes a single unit. The fire pump controller/power transfer switch shall be factory assembled, wired and tested as a unit prior to shipment.

1.3 Circuit Breaker

The power transfer switch shall include a motor rated combination isolating disconnect switch/circuit breaker, mechanically interlocked and operated with a single, externally mounted handle. When moving the handle from OFF to ON, the interlocking mechanism shall sequence the isolating disconnect switch closed first, and then the circuit breaker. When the handle is moved from ON to OFF, the interlocking mechanism shall sequence the circuit breaker open first, and then the isolating disconnect switch.
The isolating disconnect switch/circuit breaker shall be mechanically interlocked so that the enclosure door cannot be opened with the handle in the ON position except by a hidden tool operated bypass mechanism. The isolating disconnect switch/circuit breaker shall be capable of being padlocked in the OFF position for installation and maintenance safety, and shall also be capable of being locked in the ON position without affecting the tripping characteristics of the circuit breaker.
The circuit breaker trip curve adjustment shall be factory set, tested and sealed for the connected full load amps of the motor.
The circuit breaker shall be capable of being field tested to verify actual pick up, locked rotor, and instantaneous trip points after field installation without disturbing incoming line and load conductors.

1.4 Operator Interface

The transfer switch control panel shall have a 4 line, 20 character LCD display and keypad for viewing all available data and setting desired operational parameters. Voltage and frequency on both the normal and emergency sources shall be continuously monitored. The normal source pick up shall be set at 95% of nominal voltage and the emergency source pick up set at 90% of nominal voltage and 95% nominal frequency. Source status screens shall be provided for both normal & emergency to provide digital readout of voltage, frequency and phase rotation on all 3 phases.

1.5 Automatic Transfer Switch

The automatic transfer switch shall consist of an inherently double throw power transfer

switch mechanism and a microprocessor control panel to provide automatic operation. The transfer switch and control panel shall be of the same manufacturer. The automatic transfer switch shall be an ASCO 7000 series with a group 5 control panel.
The transfer switch shall be electrically operated and mechanically held. The electrical operator shall be a momentarily energized, single solenoid mechanism. The switch shall be mechanically interlocked to ensure only two possible positions, normal or emergency. Switches having a neutral position shall not be permitted.
The switch shall be positively locked and unaffected by momentary outages, so that contact pressure is maintained at a constant value and contact temperature rise is minimized for maximum reliability and operating life. All main contacts shall be silver composition and inspection of all contacts shall be possible from the front of the switch without disassembly of operating linkages and without disconnection of power.
Designs utilizing components of molded case circuit breakers, contactors, or parts thereof, which are not intended for continuous duty, repetitive switching or transfer between two active power sources are not acceptable.
A selector switch shall be supplied to manually test the transfer to emergency and the re-transfer to normal power.

1.6 Remote Alarm Contacts

Remote alarm contacts shall be supplied as standard for the following conditions:

- Emergency Source Isolation Switch Open
- Normal Power Available
- Emergency Power Available
- Transfer Switch Position

1.7 Visual Indicators

Indicators, visible with the door closed, shall indicate:

- Transfer Switch in Normal
- Transfer Switch in Emergency
- Normal Source Accepted
- Emergency Source Accepted
- Emergency Isolation Switch Open

1.8 Audible Alarm Indication

An audible alarm shall sound for the following conditions:

- Emergency Isolation Switch Open
- Transfer Switch in Emergency

A Silence Alarm push-button shall be supplied.

1.9 Seismic Certification

The controller shall be certified to meet or exceed the requirements of the 2012 International Building Code and the 2013 California Building Code for Importance Factor 1.5 Electrical Equipment for Sds equal to 1.88 or less severe seismic regions. Qualifications shall be based upon successful tri-axial shake-table testing in accordance with ICC-ES AC-156. Certification without testing shall be unacceptable. Controller shall be clearly labeled as rated for installation in seismic areas and a Certificate of Conformance shall be provided with the controller.

2.0 Manufacturer

The transfer switch shall be a Firetrol brand model FTA950.

3412 Apex Peakway
Apex, North Carolina 27502
P +1 919 460 5200
F +1 919 460 5250
www.firetrol.com

Firetrol™, Inc.

While every precaution has been taken to ensure accuracy and completeness herein, Firetrol, Inc. assumes no responsibility, and disclaims all liability, for damages resulting from use of this information or for any errors or omissions. Specifications and drawings are subject to change without notice. ©2019 Firetrol, Inc., All Rights Reserved.

Publication SP950-50 Rev. D

Product Description

FTA1300

Mark IIXG Electric Fire Pump Controllers — Wye-Delta Open Transition Starting

Description—Firetrol® FTA1300 Wye-Delta, Open Transition Starting Fire Pump Controllers are used with delta-wound squirrel cage motors. FTA1300 controllers are of the open circuit transition type in which the motor circuit is opened during the transition from start to run. The controller monitors, displays and records fire pump system information.

Actuating the controller by the pressure switch, START push-button or deluge valve contact closes the start contactor connecting the motor to the line in the wye connection. The motor will draw approximately 33% of its normal inrush current and develop approximately 33% of its normal starting torque. After a time delay, the motor is automatically reconnected in delta, applying full voltage to the motor windings. These controllers are recommended especially for use with generator sets.

Approvals – Firetrol fire pump controllers are listed by Underwriters' Laboratories, Inc., in accordance with UL218, *Standard for Fire Pump Controllers*, CSA, *Standard for Industrial Control Equipment*, and approved by Factory Mutual. They are built to meet or exceed the requirements of the approving authorities as well as NEMA and the latest editions of NFPA 20, *Installation of Centrifugal Fire Pumps*, and NFPA 70, *National Electrical Code*.

Standard Features—The following are included as standard with each controller:

- Voltage surge protector
- Main Disconnect Switch sized for connected motor horsepower and voltage
- Fire pump Circuit Breaker
- Single handle Isolating Disconnect Switch/ Circuit Breaker mechanism
- Motor contactor
- Emergency Manual Run Mechanism to mechanically close motor contactor contacts in an emergency condition
- Built-in Start and Stop push-buttons to bypass automatic start circuits
- Minimum Run Timer / Off Delay Timer
- Daylight Savings Time Option
- Weekly Test Timer
- Elapsed Time Meter
- Door mounted display/interface panel featuring a 128 x 64 pixel backlit LCD Graphical Display, Membrane Type User Control Push-buttons and easy to read LED Indicators for:
  - POWER AVAILABLE
  - ALARM
  - TRANSFER SWITCH NORMAL (If unit ordered with Automatic Power Transfer Switch)
  - TRANSFER SWITCH EMERGENCY (If unit ordered with Automatic Power Transfer Switch)
  - SYSTEM PRESSURE LOW
  - PUMP RUNNING
  - DELUGE OPEN
  - REMOTE START
  - INTERLOCK ON
  - FAIL TO START
  - MOTOR OVERLOAD
  - EMERGENCY ISO SWITCH OFF (If unit ordered with Automatic Power Transfer Switch)
  - PHASE FAILURE
  - PHASE REVERSAL
  - AUTOMATIC SHUTDOWN DISABLED
  - OVERVOLTAGE
  - UNDERVOLTAGE
- Digital Pressure Display
- USB Host Controller and Port
- Solid State Pressure Transducer
- Data Log
- Event Log (3000 Events)
- True RMS Metering with simultaneous 3 Phase Display of Amps, Volts, Frequency, Pressure and Alarm Messages
- Disk Error message
- Disk Near Full message
- Pressure Error message
- Motor Over 320% message
- Local Start message
- Remote Start message
- Emergency Start message
- Fail To Start message
- Undervoltage message
- Overvoltage message
- NEMA Type 2 (IEC IP22) enclosure
- Suitable for use as Service Equipment
- Each standard controller comes with user set options for:
  - Interlock Alarm
  - Low Pressure Audible
  - Low Suction
  - Pump Run
  - User Defined Input
  - Weekly Test

SPECIAL ENCLOSURES
-E Enclosure, NEMA Type 4 (IP66), Painted Steel
-F Enclosure, NEMA Type 4X (IP66), #304 Stainless Steel, Brushed Finish
-FD Enclosure, NEMA Type 4X (IP66), #316 Stainless Steel, Brushed Finish
-FDB Enclosure, NEMA Type 4X (IP66), #316 Stainless Steel, 12 Gauge, Seam-Welded, Brushed Finish
-FDP Enclosure, NEMA Type 4X (IP66), #316 Stainless Steel, Painted Finish
-FXP Enclosure, NEMA Type 4X (IP66), #304 Stainless Steel, Painted Finish
-G Enclosure, NEMA Type 12 (IP54), Painted Steel
-T Enclosure, NEMA Type 3R (IP24), Painted Steel

CIRCUIT BREAKER OPTION
-N Intermediate withstand rating 150,000 Amps RMS Sym.
-P High withstand rating 200,000 Amps RMS Sym
Note: Intermediate and High withstand ratings may not be available for all horsepowers and voltages. Consult factory for availability.

ANTI-CONDENSATION SPACE HEATERS
-H Space Heater, 120V Externally Powered with Circuit Breaker
-J Space Heater, 120V Externally Powered with Circuit Breaker and Thermostat
-K Space Heater, 120V Externally Powered with Circuit Breaker and Humidistat
-L Space Heater, 240V Externally Powered with Circuit Breaker
-M Space Heater, 240V Externally Powered with Circuit Breaker and Thermostat
-N Space Heater, 240V Externally Powered with Circuit Breaker and Humidistat

PRESSURE TRANSDUCERS
-B Wetted Parts Including Pressure Sensor, 600 psi (42 Bar) Fresh Water
-C Wetted Parts Including Pressure Sensor, 300 psi (21 Bar) Sea Water
-D Wetted Parts Including Pressure Sensor, 600 psi (42 Bar) Fresh Water

COMBINED AUTOMATIC POWER TRANSFER SWITCHES
-TSA FTA950 Automatic Transfer Switch, Group 5
-TSAB FTA951 Automatic Transfer Switch, J-Bypass Isolation, Group 5

ALARMS
-AC Alarm Output Contacts Extra, Pump Operating (1 Form A, 1 Form B)
-AF Alarm, Audible/Visible, Low Pump Room Temperature
-AG Alarm, Audible/Visible, Reservoir Low
-AH Alarm, Audible/Visible, Low Suction Pressure
-AM Alarm Output Contacts, Fail to Start
-AV Alarm Output Contacts, Low Pump Room Temperature (Requires option -AF)
-AW Alarm Output Contacts, Reservoir Low (Requires option -AG)
-AY Alarm Output Contacts, Low Suction Pressure (Requires option -AH)
-BW Alarm Output Contacts, Phase Failure/Phase Reversal
-BY Alarm Output Contacts, Pump Overload
-COM Alarm, Audible/Visible/Output Contacts, Low Suction Pressure with Manual Reset Option, Pressure Switch Not Included (Do Not Use Options AH or AY)
-CTS Alarm, Audible/Visible/Output Contacts, Low Suction Pressure Shutdown with Manual Reset Option and Pressure Switch (Do Not Use Options AH or AY)
-EG Alarm, Audible/Visible, Relief Valve Discharge
-EH Alarm Output Contacts, Relief Valve Discharge (Requires option -EG)
-EJ Alarm, Audible/Visible, Flow Meter On
-EK Alarm Output Contacts, Flow Meter On (Requires option -EJ)
-KH Alarm Output Contacts, Common Alarm
-JR Visible Indicator, Jockey Pump Operating
-JT Alarm, Audible/Visible, Jockey Pump Trouble
-P Alarm, Audible/Visible, Built-In 120V Supervisory System (Includes visible supervisory voltage normal indication and audible pump operating, phase failure and phase reversal indication)
-PE Alarm Output Contacts, Low System Pressure (pump on demand)
-PT Alarm, Audible/Visible, Built-in 240V Supervisory System (Includes visible supervisory voltage normal indication and audible pump operating, phase failure and phase reversal indication)

MISCELLANEOUS
-AZ Thermostat, Low Pump Room Temperature, Mounted and Wired
-ED Output Contacts, Load Shed (Selectable power source and adjustable time delay to remove non-critical loads before starting)
-EL Series Pumping Operation, High Zone Controller
-EM Series Pumping Operation, Mid Zone Controller
-EN Series Pumping Operation, Low Zone Controller
-FZX Rating, Nameplate to be marked 380-400V (Use with voltage code 'F' or 'FZ')
-IEC Marking, CE with External Wet Parts (Requires NEMA Type 12 (IP54) Enclosure as minimum)
-IECI Marking, CE with Internal Wet Parts (Requires NEMA Type 12 (IP54) Enclosure as minimum)
-OSP OSHPD Seismic Certification (State of California) (Requires Option -SEI)
-MZN Neutral Lug, Service Entrance, Non-insulated Bonded to Enclosure
-PK Terminal Blocks, Extra Remote Start
-PY Output Contacts, Motor Space Heater Circuit, Externally Powered
-S Tropicalization
-SEI Marking, Seismic Certified (in accordance with IBC) (Note: Not available on model FTA1500)
-USBX Data Port, External USB
-ZPA Scheduled Service Message (when factory programmed or programmed by Firetrol representative during start-up)
-ZPM Data Port, Serial Modbus RTU Over 2-Wire or 4-Wire RS485
-ZPN Data Port, Serial Modbus RTU Over Ethernet TCP/IP

Export packaging (Wooden crating to conform to IPPC Standards)
FTA1000 - 1930

Firetrol, Inc.
3412 Apex Peakway
Apex, North Carolina 27502
P +1 919 460 5200
F +1 919 460 5250
www.firetrol.com

While every precaution has been taken to ensure accuracy and completeness herein, Firetrol, Inc. assumes no responsibility, and disclaims all liability, for damages resulting from use of this information or for any errors or omissions. Specifications and drawings are subject to change without notice. ©2019 Firetrol, Inc., All Rights Reserved.

Firetrol

Power Transfer Switch

Product Description
FTA950
Assembled With Electric Fire Pump Controller

Description—Firetrol® Power Transfer Switches are available completely assembled with Firetrol Electric Fire Pump Controllers; full or reduced voltage types. The power transfer switches are built for use with generator set or 2nd utility use. The entire package of power transfer switch and controller is completely factory assembled, wired, tested and shipped as a complete unit for easy field connection to the power sources and the fire pump motor.

Approvals—Firetrol power transfer switches are listed by Underwriters' Laboratories, Inc., in accordance with UL218, *Standard for Fire Pump Controllers*; UL1008, *Automatic Transfer Switches*; UL508, *Industrial Control Equipment*; CSA, *Standard for Industrial Control Equipment*; and approved by Factory Mutual. They are built to meet or exceed the requirements of the approving authorities as well as NEMA and the latest editions of NFPA 20, *Installation of Centrifugal Fire Pumps*, and NFPA 70, *National Electrical Code*.

Standard Features—The following are included as standard with each transfer switch:

- Emergency power source disconnect switch sized for connected motor horsepower and voltage
- Fire pump circuit breaker
- Mark II monitors for overcurrent tripping (non-thermal) of circuit breaker and alarm indicator for phase failure/phase reversal
- 3-pole, double throw transfer switch mechanism, electrically operated, mechanically held
- ASCO Power Tech Group 5 Control module providing for the following:
  - -Door mounted operator interface panel with 4 line LCD display
  - -In-phase monitor
  - -Programmable engine exerciser
  - -Transfer switch data logging
  - -Differential voltage sensing on all phases of the normal power source
  - -Voltage sensing of the emergency power source
  - -Frequency sensing of the emergency power source
  - -Transfer time delay to compensate for momentary power outages of the normal source
  - -Retransfer from emergency to normal source is automatically delayed unless the emergency source fails
  - -Cool-down timer for unloaded running of the generator set after retransfer to the normal power source
  - -Instantaneous retransfer to normal if the emergency source fails and the normal source is available
  - -3 second transfer restart delay to reduce current surges when transferring to or from the emergency source
  - -NO and NC engine control contacts to start the generator set when the normal power source fails
- Transfer Switch Normal LED
- Transfer Switch Emergency LED
- Emergency Isolating Switch Open LED
- Test Selector Switch
- Transfer By-pass Switch
- Silence Alarm Push-button
- Emergency Isolating Switch Open and Transfer Switch in Emergency Audible Alarms
- Output contacts (NO and NC) for Generator Start, Emergency Isolating Switch Open and Transfer Switch position indicators
- NEMA Type 2 enclosure (IEC IP22)

Options—The following are available as options to FTA950 Power Transfer Switches: (Note: The short circuit current rating for the normal power source and the emergency power source side of the power transfer switch will be the same as the rating of the fire pump controller assembled with the power transfer switch.)

Circuit Breaker Option

-M Standard withstand rating
200-600V - 100,000 Amps, RMS Sym.
-N Intermediate withstand rating
200-600V - 150,000 Amps, RMS Sym.
-P High withstand rating
200-600V - 200,000 Amps, RMS Sym.
-Q Standard intermediate withstand rating
200-480V - 65,000 Amps RMS Sym.
-R Standard low withstand rating
550-600V - 42,000 Amps RMS Sym.

Modifications—The following are available as modifications to all transfer switches:

Special Enclosures

-E Enclosure, NEMA Type 4 (IP66), Painted Steel
-F Enclosure, NEMA Type 4X (IP66), #304 Stainless Steel, Brushed Finish
-FD Enclosure, NEMA Type 4X (IP66), #316 Stainless Steel, Brushed Finish
-FDB Enclosure, NEMA Type 4X (IP66), #316 Stainless Steel, 12 Gauge, Seam-Welded, Brushed Finish
-FDP Enclosure, NEMA Type 4X (IP66), #316 Stainless Steel, Painted Finish
-FXP Enclosure, NEMA Type 4X (IP66), #304 Stainless Steel, Painted Finish
-G Enclosure, NEMA Type 12 (IP54), Painted Steel
-T Enclosure, NEMA Type 3R (IP24), Painted Steel

Anti-condensation Space Heaters

-H 120 Volt space heater
-J 120 Volt space heater with thermostat
-K 120 Volt space heater with humidistat
-L 240 Volt space heater
-M 240 Volt space heater with thermostat
-N 240 Volt space heater with humidistat

Alarms

-EC Extra contacts for remote indication, transfer switch position
-BX Contacts for remote indication, second utility source phase failure/phase reversal (FTA950 only)

Miscellaneous

-ED Load shed circuits
-TN As above, with serial communications port
-S Tropicalization

Firetrol, Inc.
3412 Apex Peakway
Apex, North Carolina 27502
P +1 919 460 5200
F +1 919 460 5250
www.firetrol.com

While every precaution has been taken to ensure accuracy and completeness herein, Firetrol, Inc. assumes no responsibility, and disclaims all liability, for damages resulting from use of this information or for any errors or omissions. Specifications and drawings are subject to change without notice. ©2019 Firetrol, Inc., All Rights Reserved.

Publication PD950-50 Rev. F

Firetrol™

Mark IIXG Electric Fire Pump Controllers

Model Number Selection Guide

FTA1000 - FTA1930

FTA1000, 1250, 1300, 1350, 1500, 1800, 1930
ELECTRIC FIRE PUMP CONTROLLERS
Example: FTA1300-AM75HH-xx

Starting Method
1000 - Across-the-line (direct on line)
1250 - Part Winding (50%-50% windings)
1300 - Wye-delta (star-delta), open transition
1350 - Wye-delta (star-delta), closed transition
1500 - Primary resistor
1800 - Autotransformer
1930 - Digital Solid-state soft start/stop

Modifications
See Back

Start/Stop Options
A - Automatic start with timed permissive stop after minimum run time and manual start with manual stop, field convertible to automatic start and manual start with manual stop only
B - Automatic start and manual start with manual stop
C - Manual start and stop

Short Circuit Current Rating
M - Standard short circuit rating 100,000 Amperes RMS Sym. at 200 - 600 V
N - Intermediate short circuit rating 150,000 Amperes RMS Sym. at 200 - 600 V
P - High short circuit rating 200,000 Amperes RMS Sym. at 200 - 600 V
Q - Standard intermediate short circuit rating 65,000 Amperes RMS Sym. at 550 - 600 V
R - Standard low short circuit rating 42,000 Amperes RMS Sym. at 550 - 600 V

Three Phase Voltage

A -	220-240 Volt, 60 Hertz (230 V)
AZ -	220-230 Volt, 50 Hertz
B -	440-480 Volt, 60 Hertz (460 V)
BZ -	415 Volt, 50 Hertz
C -	550-600 Volt, 60 Hertz (575 V)
F -	380 Volt, 60 Hertz
FZ -	380 Volt, 50 Hertz
H -	208 Volt, 60 Hertz
HH -	200 Volt, 60 Hertz

Horsepower Rating

03 - 3 HP	100 - 100 HP
05 - 5 HP	125 - 125 HP
07 - 7 1/2 HP	150 - 150 HP
10 - 10 HP	200 - 200 HP
15 - 15 HP	250 - 250 HP
20 - 20 HP	300 - 300 HP
25 - 25 HP	350 - 350 HP
30 - 30 HP	400 - 400 HP
40 - 40 HP	450 - 450 HP
50 - 50 HP	500 - 500 HP
60 - 60 HP	600 - 600 HP
75 - 75 HP	700 - 700 HP

SPECIAL ENCLOSURES
- -E Enclosure, NEMA Type 4 (IP66), Painted Steel
- -F Enclosure, NEMA Type 4X (IP66), #304 Stainless Steel, Brushed Finish
- -FD Enclosure, NEMA Type 4X (IP66), #316 Stainless Steel, Brushed Finish
- -FDB Enclosure, NEMA Type 4X (IP66), #316 Stainless Steel, 12 Gauge, Seam-Welded, Brushed Finish
- -FDP Enclosure, NEMA Type 4X (IP66), #316 Stainless Steel, Painted Finish
- -FXP Enclosure, NEMA Type 4X (IP66), #304 Stainless Steel, Painted Finish
- -G Enclosure, NEMA Type 12 (IP54), Painted Steel
- -T Enclosure, NEMA Type 3R (IP24), Painted Steel

CIRCUIT BREAKER OPTION
- -N Intermediate withstand rating 150,000 Amps RMS Sym.
- -P High withstand rating 200,000 Amps RMS Sym

Note: Intermediate and High withstand ratings may not be available for all horsepowers and voltages. Consult factory for availability.

ANTI-CONDENSATION SPACE HEATERS
- -H Space Heater, 120V Externally Powered with Circuit Breaker
- -J Space Heater, 120V Externally Powered with Circuit Breaker and Thermostat
- -K Space Heater, 120V Externally Powered with Circuit Breaker and Humidistat
- -L Space Heater, 240V Externally Powered with Circuit Breaker
- -M Space Heater, 240V Externally Powered with Circuit Breaker and Thermostat
- -N Space Heater, 240V Externally Powered with Circuit Breaker and Humidistat

PRESSURE TRANSDUCERS
- -B 0-600 psi (0-42.25 bar) Pressure Transducer for Fresh Water Service
- -C 0-300 psi (0-21.1 bar) Pressure Transducer for Copper Corrosive Service
- -D 0-600 psi (0-42.25 bar) Pressure Transducer for Corrosive Service

COMBINED AUTOMATIC POWER TRANSFER SWITCHES
- -TSA FTA950 Automatic Transfer Switch, Group 5
- -TSAB FTA951 Automatic Transfer Switch, J-Bypass Isolation, Group 5

ALARMS
- -AC Alarm Output Contacts Extra, Pump Operating (1 Form A, 1 Form B)
- -AF Alarm, Audible/Visible, Low Pump Room Temperature
- -AG Alarm, Audible/Visible, Reservoir Low
- -AH Alarm, Audible/Visible, Low Suction Pressure
- -AM Alarm Output Contacts, Fail to Start
- -AV Alarm Output Contacts, Low Pump Room Temperature (Requires option -AF)
- -AW Alarm Output Contacts, Reservoir Low (Requires option -AG)
- -AY Alarm Output Contacts, Low Suction Pressure (Requires option -AH)
- -BW Alarm Output Contacts, Phase Failure/Phase Reversal
- -BY Alarm Output Contacts, Pump Overload
- -COM Alarm, Audible/Visible/Output Contacts, Low Suction Pressure with Manual Reset Option, Pressure Switch Not Included (Do Not Use Options AH or AY)
- -CTS Alarm, Audible/Visible/Output Contacts, Low Suction Pressure Shutdown with Manual Reset Option and Pressure Switch (Do Not Use Options AH or AY)
- -EG Alarm, Audible/Visible, Relief Valve Discharge
- -EH Alarm Output Contacts, Relief Valve Discharge (Requires option -EG)
- -EJ Alarm, Audible/Visible, Flow Meter On
- -EK Alarm Output Contacts, Flow Meter On (Requires option -EJ)
- -KH Alarm Output Contacts, Common Alarm
- -JR Visible Indicator, Jockey Pump Operating
- -JT Alarm, Audible/Visible, Jockey Pump Trouble
- -P Alarm, Audible/Visible, Built-In 120V Supervisory System (Includes visible supervisory voltage normal indication and audible pump operating, phase failure and phase reversal indication)
- -PE Alarm Output Contacts, Low System Pressure (pump on demand)
- -PT Alarm, Audible/Visible, Built-in 240V Supervisory System (Includes visible supervisory voltage normal indication and audible pump operating, phase failure and phase reversal indication)

MISCELLANEOUS
- -AZ Thermostat, Low Pump Room Temperature, Mounted and Wired
- -ED Output Contacts, Load Shed (Selectable power source and adjustable time delay to remove non-critical loads before starting)
- -EL Series Pumping Operation, High Zone Controller
- -EM Series Pumping Operation, Mid Zone Controller
- -EN Series Pumping Operation, Low Zone Controller
- -FZX Rating, Nameplate to be marked 380-400V (Use with voltage code 'F' or 'FZ')
- -IEC Marking, CE with External Wet Parts (Requires NEMA Type 12 (IP54) Enclosure as minimum)
- -IECI Marking, CE with Internal Wet Parts (Requires NEMA Type 12 (IP54) Enclosure as minimum)
- -OSP OSHPD Seismic Certification (State of California) (Requires Option -SEI)
- -MZN Neutral Lug, Service Entrance, Non-insulated Bonded to Enclosure
- -PK Terminal Blocks, Extra Remote Start
- -PY Output Contacts, Motor Space Heater Circuit, Externally Powered
- -S Tropicalization
- -SEI Marking, Seismic Certified (in accordance with IBC) (Note: Not available on model FTA1500)
- -USBX Data Port, External USB
- -ZPA Scheduled Service Message (when factory programmed or programmed by Firetrol representative during start-up)
- -ZPM Data Port, Serial Modbus RTU Over 2-Wire or 4-Wire RS485
- -ZPN Data Port, Serial Modbus RTU Over Ethernet TCP/IP

Export packaging (Wooden crating to conform to IPPC Standards)
FTA1000 - 1930

Firetrol, Inc.
3412 Apex Peakway
Apex, North Carolina 27502
P +1 919 460 5200
F +1 919 460 5250
www.firetrol.com

While every precaution has been taken to ensure accuracy and completeness herein, Firetrol, Inc. assumes no responsibility, and disclaims all liability, for damages resulting from use of this information or for any errors or omissions. Specifications and drawings are subject to change without notice. ©2019 Firetrol, Inc., All Rights Reserved.

Publication SD1000-50 Rev. L

Firetrol

Power Transfer Switches

Model Number Selection Guide
FTA950
Assembled With Electric Fire Pump Controller

FIRE PUMP POWER TRANSFER SWITCH
FTA950

FTA950 -A _ _ _ _ _ _ (Example: FTA950-AM150H-G)

Catalog Number
FTA950

AMPERE RATING

Horse-power	200-208V	220-240V	380-415V	440-480V	550-600V
15-25	100	100	100	100	100
30	150	100	100	100	100
40	150	150	100	100	100
50	225	150	100	100	100
60	225	225	150	100	100
75	260	225	150	150	100
100	400	400	225	150	150
125	600	400	260	225	150
150	600	600	400	225	225
200	800	600	400	400	225
250	800	800	600	400	400
300	—	800	600	600	400
350	—	—	800	600	400
400	—	—	800	600	600
450	—	—	1000	600	600
500	—	—	—	800	800
600	—	—	—	1000	800
700	—	—	—	—	800

3-Phase Operating Voltage
A = 220-240V, 60 Hz
AZ = 220-230V, 50 Hz
B = 440-480V, 60 Hz
BZ = 415V, 50 Hz
C = 550-600V, 60 Hz
F = 380V, 60 Hz
FZ = 380V, 50 Hz
H = 208V, 60 Hz
HH = 200V, 60 Hz

Short-Circuit Current Rating (Withstand)
FTA950
M = Standard Short Circuit Rating
100,000 A RMS Sym., 200-600V
N = Intermediate Short Circuit Rating
150,000 A RMS Sym., 200-600V
P = High Short Circuit Rating
200,000 A RMS Sym., 200-600V
Q = Standard Intermediate Short Circuit Rating
65,000 A RMS Sym., 200-480V
R = Standard Low Short Circuit Rating
42,000 A RMS Sym., 550-600V

MODIFICATIONS - See back.

SPECIAL ENCLOSURES

Transfer Switch NEMA Type enclosure will be the same as selected for the Fire Pump Controller.

ANTI-CONDENSATION SPACE HEATERS

-H 120 Volt Space Heater
-J 120 Volt Space Heater With Thermostat
-K 120 Volt Space Heater With Humidistat
-L 240 Volt Space Heater
-M 240 Volt Space Heater With Thermostat
-N 240 Volt Space Heater With Humidistat

MISCELLANEOUS

-EC Extra contacts for remote indication, transfer switch position indicator
-ED Load shed contacts
-TN Microprocessor based (Group 5) control module with serial communications port
-S Tropicalization

Firetrol, Inc.
3412 Apex Peakway
Apex, North Carolina 27502
P +1 919 460 5200
F +1 919 460 5250
www.firetrol.com

While every precaution has been taken to ensure accuracy and completeness herein, Firetrol, Inc. assumes no responsibility, and disclaims all liability, for damages resulting from use of this information or for any errors or omissions. Specifications and drawings are subject to change without notice. ©2019 Firetrol, Inc., All Rights Reserved.

Publication SD950-50 Rev. E

General Starting Configuration
FTA1300
Wye-Delta Open Transition Starting

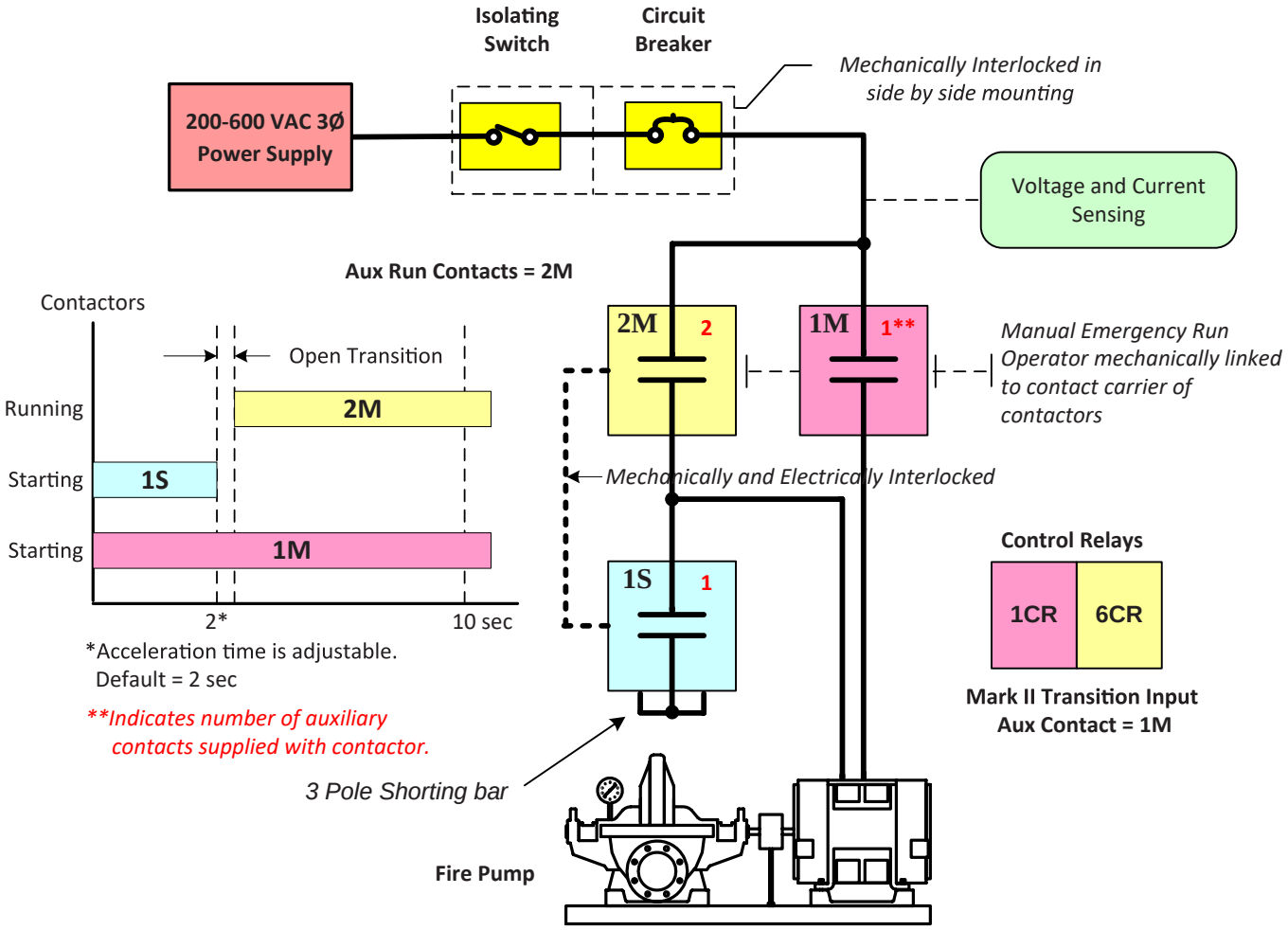

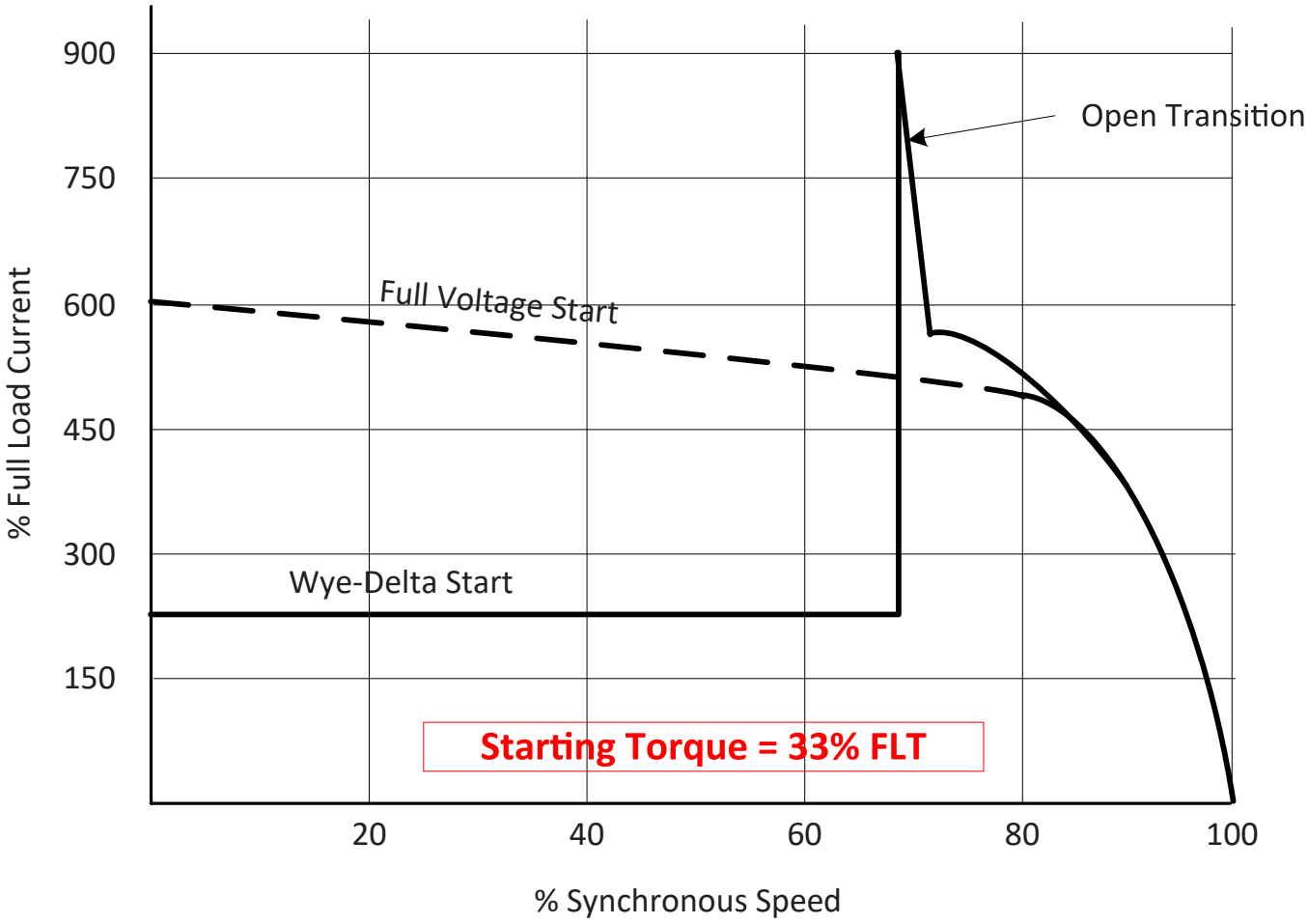

Firetrol, Inc.
3412 Apex Peakway
Apex, North Carolina 27502
P +1 919 460 5200
F +1 919 460 5250
www.firetrol.com

While every precaution has been taken to ensure accuracy and completeness herein, Firetrol, Inc. assumes no responsibility, and disclaims all liability, for damages resulting from use of this information or for any errors or omissions. Specifications and drawings are subject to change without notice. ©2019 Firetrol, Inc., All Rights Reserved.

Publication GS1300-01 Rev. C

Dimensions and Shipping Weight
FTA1300 / FTA950
Wye-Delta Open Transition Starting With Power Transfer Switch

Mark IIXG Electric Fire Pump Controllers

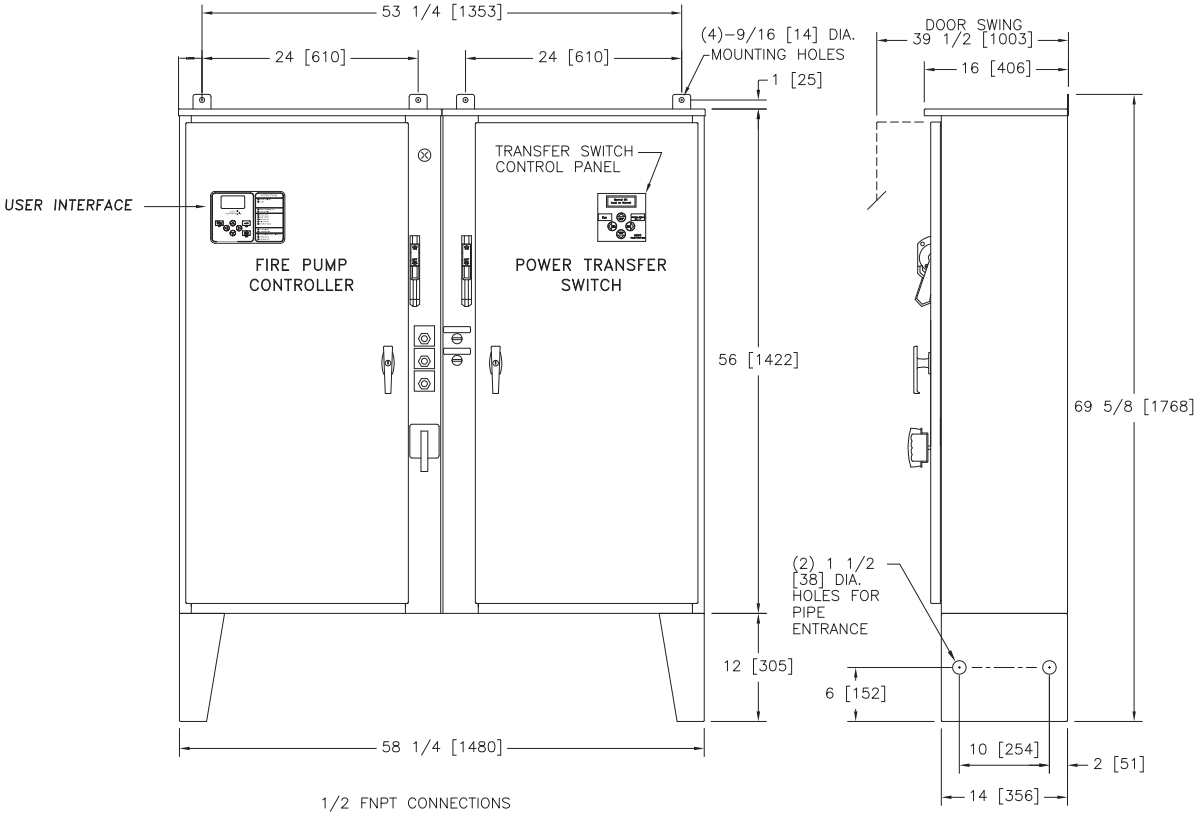

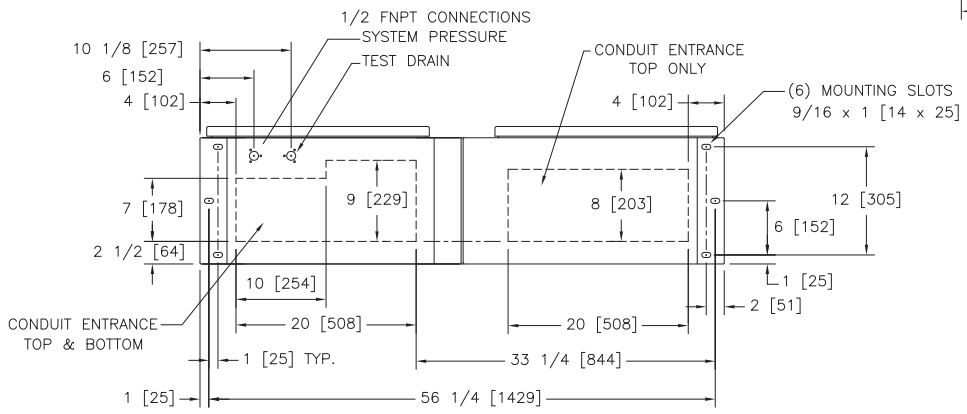

STANDARD WITHSTAND RATINGS 200–600V – 100,000 Amps RMS Sym. INTERMEDIATE WITHSTAND RATINGS 200–600V – 150,000 Amps RMS Sym. HIGH WITHSTAND RATINGS 200–600V – 200,000 Amps RMS Sym.	
LINE VOLTAGE	MOTOR HORSEPOWER
200	☐ 75–100
208	☐ 75–125
220–240	☐ 75–125
380–415	☐ 125–200
440–480	☐ 200–250
550–600	☐ 200–300

APPROXIMATE SHIPPING WEIGHT
585 [265]

DO NOT INSTALL IN AMBIENT TEMPERATURES BELOW 41°F [5°C].

ALL DIMENSIONS – INCHES [MM]
SHIPPING WEIGHT – POUNDS [KG]

THIS DIMENSION DRAWING COVERS FTA1300 CONTROLLERS AT THE HORSEPOWER, VOLTAGE AND WITHSTAND RATINGS AS LISTED IN THE TABLE. FOR OTHER HORSEPOWER OR WITHSTAND RATINGS, REFER TO ED1300–02

SPECIFICATIONS AND DIMENSIONS SUBJECT TO CHANGE WITHOUT NOTICE. DO NOT USE FOR CONSTRUCTION. REQUEST CONSTRUCTION DRAWINGS FROM FIRETROL OR YOUR LOCAL FIRETROL REPRESENTATIVE.

REVISION DESCRIPTION	REV	ECN NO	BY	APP	DATE
UPDATED TITLE BLOCK	D	280820	JMW	TEF	09-13-19
REVISED MOTOR HORSEPOWER CHART	C	237364	JMW	TEF	05-31-12

	SIZE	BY	DATE
THIRD ANGLE PROJECTION	A		
	DRAWN BY	TEF	07-24-02
	FINAL APPROVAL	TEF	07-24-02

Firetrol, Inc.

© Firetrol, Inc. Not for construction. Subject to change without notice.

DIMENSIONS & SHIPPING WEIGHT — FTA1300 WITH FTA950

OPEN TRANSITION WYE-DELTA FIRE PUMP CONTROLLER WITH POWER TRANSFER SWITCH

DRAWING NUMBER DD1300-63

DWG REV D | ECN NO 280820 | SHEET 1 OF 1

All rights reserved. The drawing and the information contained or depicted herein are the sole property of Firetrol, Inc. Copies are communicated to the recipient in strict confidence and may not be retransmitted, published, reproduced, copied or used in any manor, including as the basis for the manufacture or sale of any products, without the express prior written consent of Firetrol, Inc.

Field Connections
FTA1300 / FTA950
Wye-Delta Open Transition Starting With Power Transfer Switch

Mark IIXG Electric Fire Pump Controllers

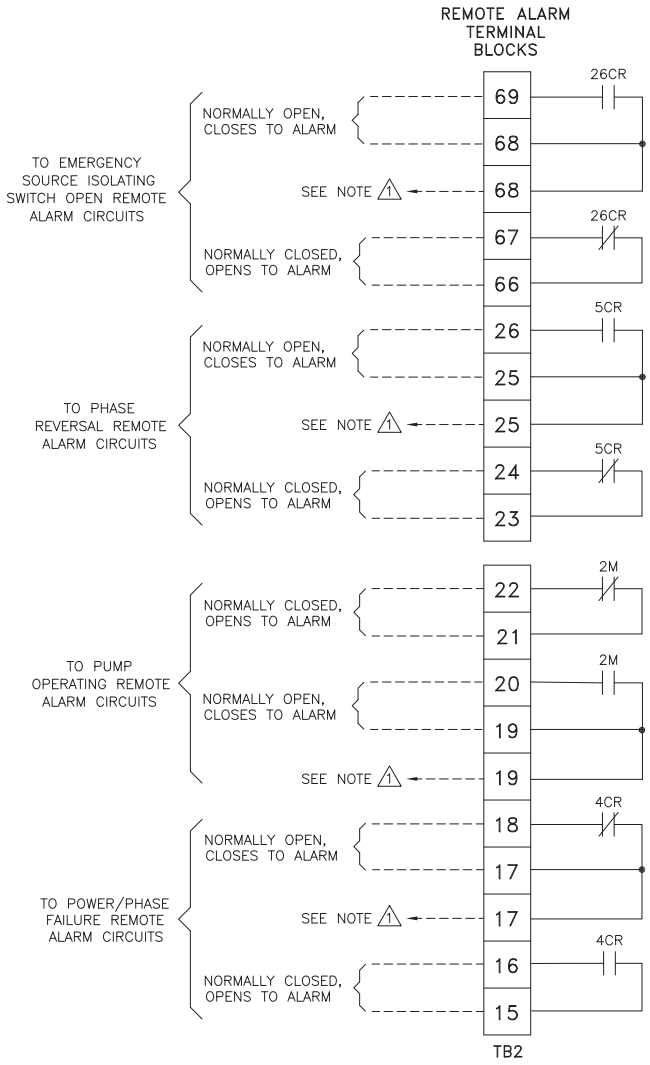

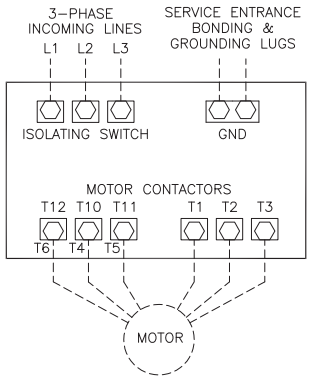

NOTES

1– Incoming line terminals are provided to accommodate wire sizes at 125% of motor full load current per NFPA 70–2008, *National Electrical Code*, Table 430–250, Section 695.6(c), and Table 310–16, 75° rated Copper conductors.

2– Controller is phase rotation sensitive. Incoming lines L1, L2 and L3 must be in ABC, right hand rotation sequence for proper operation of the phase monitor.

3– Motor connections shown are typical. Since motor connections vary widely, refer to the motor connection diagram for specific wiring arrangement.

4– For Incoming line terminals and motor terminals field wire capacity refer to drawing FC1300–51

NOTE: USE COPPER CONDUCTORS ONLY FOR ALL CONNECTIONS

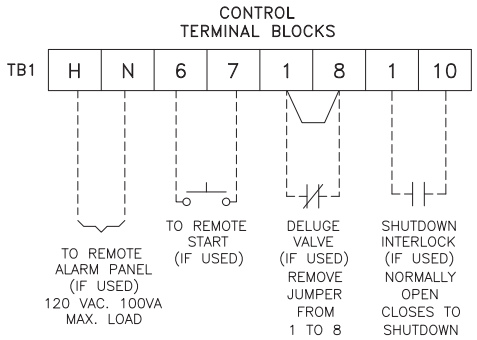

1 SPARE TERMINALS PROVIDED FOR PARALLEL CONNECTION OF REMOTE ALARMS (IF REQUIRED)

NOTE: TERMINALS FOR CUSTOMER CONNECTIONS REQUIRE 3.5MM SLOTTED SCREW DRIVER

TERMINAL TIGHTENING TORQUE		
TERMINAL TYPE	WIRE SIZE	TIGHTENING TORQUE
CONTROL AND ALARM TERMINALS	#14–12 AWG [2.5–4 MM^2]	5.6 lb–in [.6 Nm]

–NOTE–
ALARM CONTACT RATING PILOT DUTY 250 VAC, 30 VDC 10 A. MAX. LOAD

PRESSURE SYSTEM CONNECTION 1/2" FNPT

REV	REVISION DESCRIPTION	ECN NO	BY	APP	DATE
B	UPDATED TITLE BLOCK	280820	JMW	TEF	09-13-09
A	ADD NOTE FOR COPPER CONDUCTORS ONLY; UPDATED LOGO & TITLE BLOCK	226253	JC	TEF	12-09-09

	SIZE	BY	DATE
THIRD ANGLE PROJECTION	A		
	DRAWN BY	TEF	05-06-02
	FINAL APPROVAL	TEF	05-06-02

Firetrol, Inc.

© Firetrol, Inc. Not for construction. Subject to change without notice.

FIELD CONNECTIONS | FTA1300 WITH FTA900, FTA950

WYE-DELTA OPEN TRANSITION FIRE PUMP CONTROLLER WITH POWER TRANSFER SWITCH

DRAWING NUMBER FC1300-55

DWG REV B | ECN NO 280820 | SHEET 1 OF 2

All rights reserved. The drawing and the information contained or depicted herein are the sole property of Firetrol, Inc. Copies are communicated to the recipient in strict confidence and may not be retransmitted, published, reproduced, copied or used in any manor, including as the basis for the manufacture or sale of any products, without the express prior written consent of Firetrol, Inc.

Firetrol

Mark IIXG Electric Fire Pump Controllers

Field Connections
FTA1300 / FTA950
Wye-Delta Open Transition Starting With Power Transfer Switch

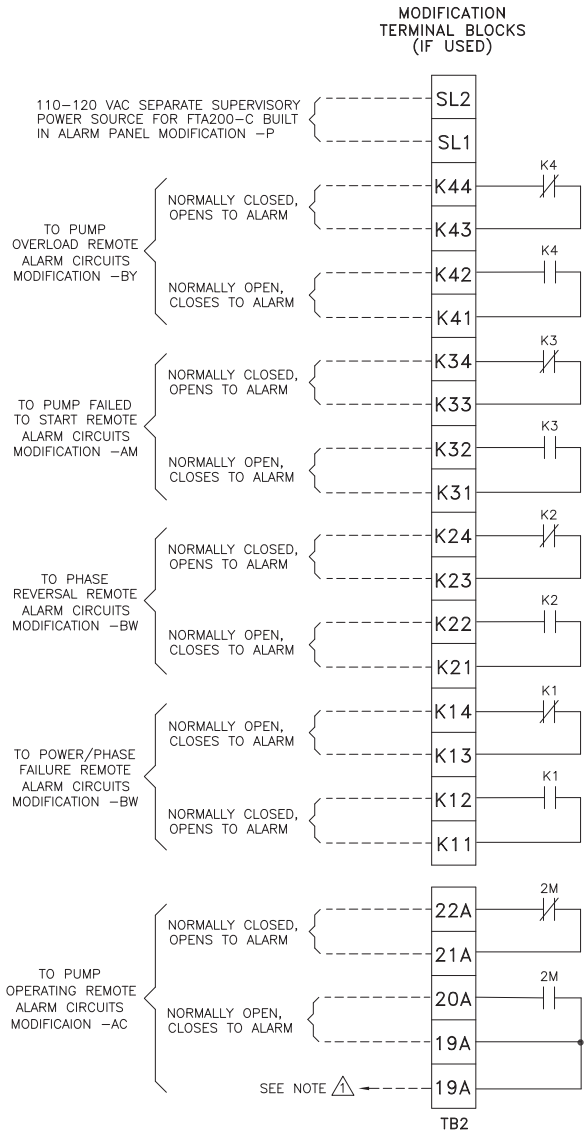

1 SPARE TERMINALS PROVIDED FOR PARALLEL CONNECTION OF REMOTE ALARMS (IF REQUIRED)

NOTE: TERMINALS FOR CUSTOMER CONNECTIONS REQUIRE 3.5MM SLOTTED SCREW DRIVER

TERMINAL TIGHTENING TORQUE		
TERMINAL TYPE	WIRE SIZE	TIGHTENING TORQUE
CONTROL AND ALARM TERMINALS	#14–12 AWG [2.5–4 MM^2]	5.6 lb–in [.6 Nm]

–NOTE–
ALARM CONTACT RATING PILOT DUTY 250 VAC, 30 VDC 10 A. MAX. LOAD

NOTE: USE COPPER CONDUCTORS ONLY FOR ALL CONNECTIONS

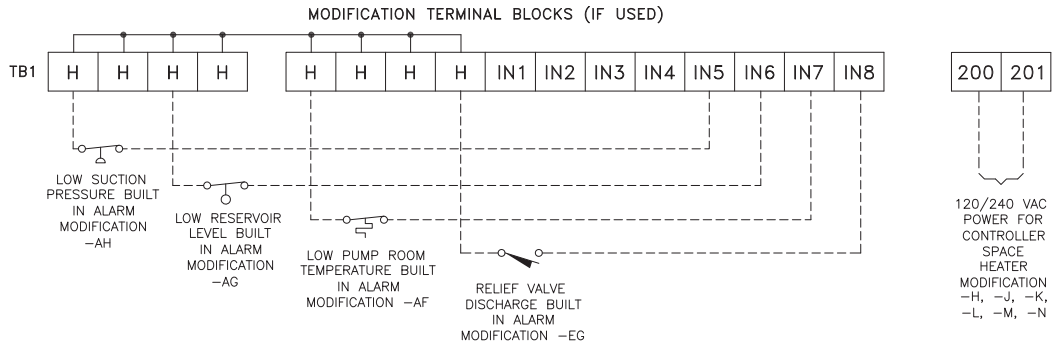

REVISION DESCRIPTION	REV	ECN NO	BY	APP	DATE
UPDATED TITLE BLOCK	B	280820	JMW	TEF	09-13-09
ADD NOTE FOR COPPER CONDUCTORS ONLY;UPDATED LOGO & TITLE BLOCK	A	226253	JC	TEF	12-09-09

	SIZE	BY	DATE
THIRD ANGLE PROJECTION	A		
	DRAWN BY	TEF	05-06-02
	FINAL APPROVAL	TEF	05-06-02

Firetrol, Inc.

© Firetrol, Inc. Not for construction. Subject to change without notice.

FIELD CONNECTIONS | FTA1300 WITH FTA900, FTA950

WYE-DELTA OPEN TRANSITION FIRE PUMP CONTROLLER WITH POWER TRANSFER SWITCH

DRAWING NUMBER FC1300-55

DWG REV B | ECN NO 280820 | SHEET 2 OF 2

All rights reserved. The drawing and the information contained or depicted herein are the sole property of Firetrol, Inc. Copies are communicated to the recipient in strict confidence and may not be retransmitted, published, reproduced, copied or used in any manor, including as the basis for the manufacture or sale of any products, without the express prior written consent of Firetrol, Inc.

Firetrol

Mark IIXG Electric Fire Pump Controllers

Field Connections

FTA1300

Wye-Delta Open Transition Starting
Line & Motor Wire Terminal Capacity

LINE TERMINALS—WIRE CAPACITY AND QUANTITY (CU) ⟨1⟩

MAXIMUM MOTOR HORSEPOWER						WIRE SIZE (CU) PER PHASE	WIRE SIZE SERVICE ENTRANCE GROUND LUG (CU) ⟨2⟩
200V	208V	220–240V	380–415V	440–480V	550–600V		
20	20	25	40	50	60	(1) #14 AWG–#1/0 AWG (1) 2.5 MM^2–50 MM^2	(2) #14 AWG–#2/0 AWG (2) 2.5 MM^2–70 MM^2
40	40	40	75	100	125	(1) #4 AWG–300 kcmil (1) 25 MM^2–150 MM^2	(2) #14 AWG–#2/0 AWG (2) 2.5 MM^2–70 MM^2
60	60	60	100	150	150	(1) #4 AWG–300 kcmil (1) 25 MM^2–150 MM^2	(2) #6 AWG–250 kcmil (2) 16 MM^2–120 MM^2
100	100	100	150	250	300	(1) 250 kcmil–500 kcmil (1) 120 MM^2–240 MM^2	(2) #6 AWG–250 kcmil (2) 16 MM^2–120 MM^2
---	125	125	200	---	---	(2) #3/0 AWG–250 kcmil (2) 95 MM^2–120 MM^2	(2) #6 AWG–250 kcmil (2) 16 MM^2–120 MM^2
200	200	250	350	500	---	(3) #2/0 AWG–400 kcmil (3) 70 MM^2 –200 MM^2	(2) #6 AWG–250 kcmil (2) 16 MM^2–120 MM^2
250	250	300	500	600	---	(4) #4/0 AWG–500 kcmil (4) 100 MM^2–240 MM^2	(2) #6 AWG–250 kcmil (2) 16 MM^2–120 MM^2

MOTOR TERMINALS—WIRE CAPACITY AND QUANTITY (CU) ⟨1⟩

MAXIMUM MOTOR HORSEPOWER						WIRE SIZE (CU) PER PHASE
200V	208V	220–240V	380–415V	440–480V	550–600V	
60	60	60	100	150	150	(1) #6 AWG–#2/0 AWG (1) 16 MM^2–70 MM^2
75	75	100	150	200	250	(1) #6 AWG–250 kcmil (1) 16 MM^2–120 MM^2
150	150	150	250	350	450	(1) #4 AWG–400 kcmil (1) 25 MM^2–200 MM^2
---	---	200	300	450	500	(2) #4 AWG–500 kcmil (2) 25 MM^2–240 MM^2
250	250	300	500	600	---	(2) 250 kcmil–500 kcmil (2) 120 MM^2–240 MM^2

⟨1⟩ FOR CORRECT WIRE SIZING, REFER TO *NATIONAL ELECTRICAL CODE*, NFPA 70.

⟨2⟩ WHEN REQUIRED BY AUTHORITY HAVING JURISDICTION.

REVISION DESCRIPTION	REV	ECN NO	BY	APP	DATE
UPDATED TITLE BLOCK	E	280820	JMW	TEF	09-13-19
UPDATED LINE TERMINAL HP/VOLTAGE CHART, CHANGED TO XT4 BREAKERS	D	270091	TEF	TEF	11-30-17

	SIZE	BY	DATE
THIRD ANGLE PROJECTION	A		
	DRAWN BY	JC	02-13-12
	FINAL APPROVAL	TEF	02-13-12

Firetrol, Inc.

© Firetrol, Inc. Not for construction. Subject to change without notice.

FIELD CONNECTIONS | FTA1300

WYE-DELTA OPEN TRANSITION FIRE PUMP CONTROLLER
LINE AND MOTOR FIELD WIRE TERMINAL CAPACITY

DRAWING NUMBER FC1300-51

DWG REV E | ECN NO 280820 | SHEET 1 OF 1

All rights reserved. The drawing and the information contained or depicted herein are the sole property of Firetrol, Inc. Copies are communicated to the recipient in strict confidence and may not be retransmitted, published, reproduced, copied or used in any manor, including as the basis for the manufacture or sale of any products, without the express prior written consent of Firetrol, Inc.

Firetrol

Power Transfer Switches

Field Connections

FTA950

Assembled With Electric Fire Pump Controllers

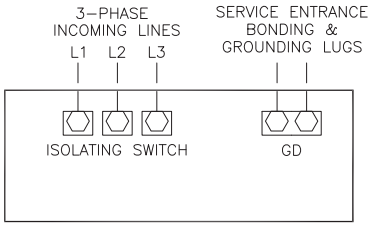

NOTE

Incoming line terminals are provided to accomodate wire sizes at 125% of motor full load current per NFPA 70, *National Electrical Code*, Table 430–250, Section 695.6(c), and Table 310–16, 75° rated Copper conductors.

–USE COPPER CONDUCTORS ONLY–

LINE TERMINALS–WIRE CAPACITY AND QUANTITY (CU) ⟨1⟩

MAXIMUM MOTOR HORSEPOWER						WIRE SIZE (CU) PER PHASE	WIRE SIZE SERVICE ENTRANCE GROUND LUG (CU) ⟨2⟩
200V	208V	220–240V	380–415V	440–480V	550–600V		
20	20	25	40	50	60	(1) #14 AWG–#1/0 AWG (1) 2.5 MM^2–50 MM^2	(2) #14 AWG–#2/0 AWG (2) 2.5 MM^2–70 MM^2
40	40	40	75	100	125	(1) #4 AWG–300 kcmil (1) 25 MM^2–150 MM^2	(2) #14 AWG–#2/0 AWG (2) 2.5 MM^2–70 MM^2
60	60	60	100	150	150	(1) #4 AWG–300 kcmil (1) 25 MM^2–150 MM^2	(2) #6 AWG–250 kcmil (2) 16 MM^2–120 MM^2
100	100	100	150	250	300	(1) 250 kcmil–500 kcmil (1) 120 MM^2–240 MM^2	(2) #6 AWG–250 kcmil (2) 16 MM^2–120 MM^2
---	125	125	200	---	---	(2) #3/0 AWG–250 kcmil (2) 95 MM^2–120 MM^2	(2) #6 AWG–250 kcmil (2) 16 MM^2–120 MM^2
200	200	250	350	500	---	(3) #2/0 AWG–400 kcmil (3) 70 MM^2 –200 MM^2	(2) #6 AWG–250 kcmil (2) 16 MM^2–120 MM^2
250	250	300	500	600	---	(4) #4/0 AWG–500 kcmil (4) 100 MM^2–240 MM^2	(2) #6 AWG–250 kcmil (2) 16 MM^2–120 MM^2

⟨1⟩ FOR CORRECT WIRE SIZING, REFER TO *NATIONAL ELECTRICAL CODE*, NFPA 70.

⟨2⟩ WHEN REQUIRED BY AUTHORITY HAVING JURISDICTION.

CONTROL AND ALARM TERMINAL BLOCKS

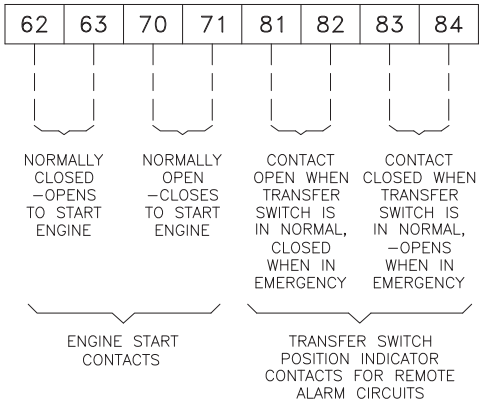

MODIFICATION ALARM TERMINAL BLOCKS

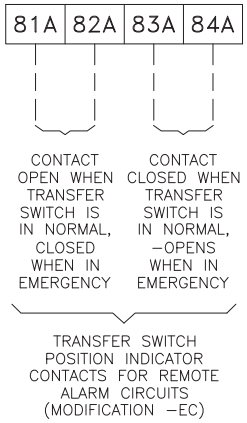

NOTE: CONTROL AND ALARM TERMINALS FOR CUSTOMER CONNECTIONS REQUIRE 3.5MM SLOTTED SCREW DRIVER

–NOTE–
ENGINE START CONTACT RATING
1/2 AMP, 30VDC

TERMINAL WIRE CAPACITY	
TERMINAL TYPE	WIRE SIZE
CONTROL AND ALARM TERMINALS	#14–12 AWG [2.5–4 MM^2]

–NOTE–
ALARM CONTACT RATING
PILOT DUTY
240 VAC, 28 VDC
5 AMP MAX. LOAD

REVISION DESCRIPTION	REV	ECN NO	BY	APP	DATE
UPDATED TITLE BLOCK	D	281357	JMW	TEF	10-16-19
REVISED LINE TERMINAL CHART, CHANGED TO XT4 BREAKERS	C	270091	TEF	TEF	11-29-17

	SIZE	BY	DATE
THIRD ANGLE PROJECTION	A		
	DRAWN BY	TEF	05-06-10
	FINAL APPROVAL	TEF	05-06-10

Firetrol, Inc.

© Firetrol, Inc. Not for construction. Subject to change without notice.

FIELD CONNECTIONS | FTA950

POWER TRANSFER SWITCH FOR GENERATOR OR SECOND UTILITY POWER SOURCE

DRAWING NUMBER FC950-55

DWG REV D | ECN NO 281357 | SHEET 1 OF 1

All rights reserved. The drawing and the information contained or depicted herein are the sole property of Firetrol, Inc. Copies are communicated to the recipient in strict confidence and may not be retransmitted, published, reproduced, copied or used in any manor, including as the basis for the manufacture or sale of any products, without the express prior written consent of Firetrol, Inc.

Firetrol

Mark IIXG Electric Fire Pump Controllers

Typical Motor Connection Diagram FTA1300 / FTA1350

Wye-Delta Starting (12-Lead Motors)

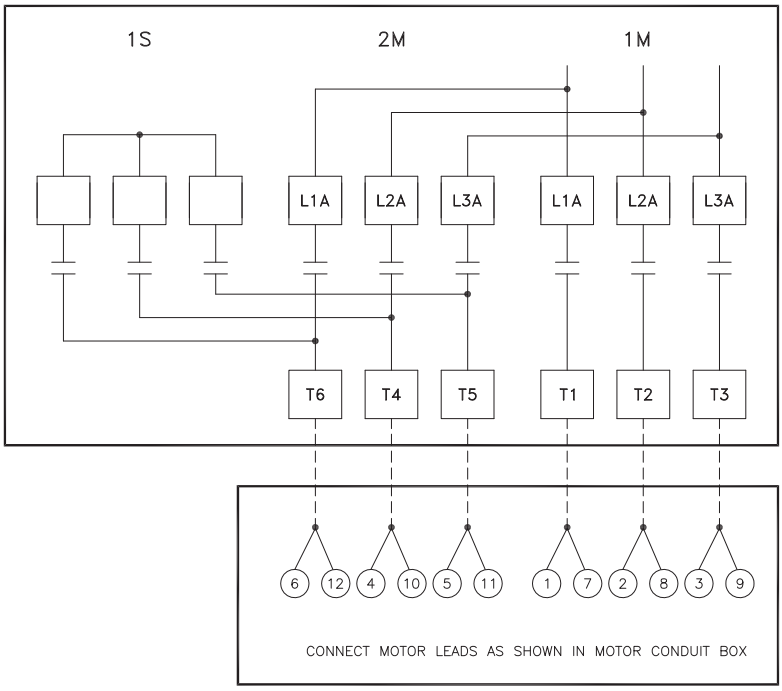

FOR SINGLE VOLTAGE 12-LEAD WYE-DELTA MOTORS

– OR –

FOR DUAL VOLTAGE WYE-DELTA MOTORS CONNECTED TO OPERATE ON THE ***LOWER*** OF THE TWO VOLTAGES 200-208 FOR 200/400V RATED MOTORS OR 220-240 FOR 230/460V RATED MOTORS.

SIX (6) WIRES REQUIRED BETWEEN MOTOR AND CONTROLLER.

IMPORTANT:
THIS DRAWING IS FOR GENERAL INFORMATION ONLY. REFER TO MOTOR CONNECTION DIAGRAM FOR SPECIFIC WIRING ARRANGEMENT.

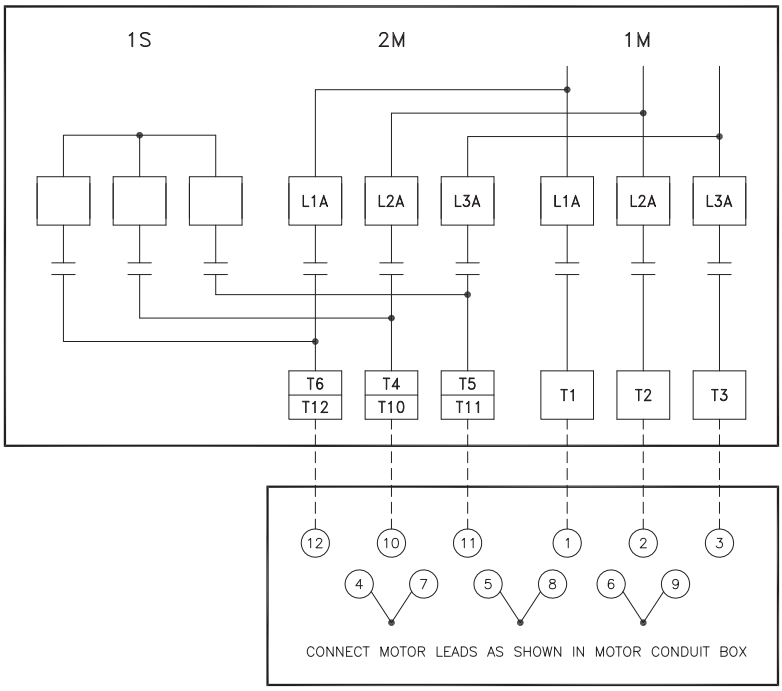

FOR DUAL VOLTAGE WYE-DELTA MOTORS CONNECTED TO OPERATE ON THE ***HIGHER*** OF THE TWO VOLTAGES 440-480 FOR 230/460V RATED MOTORS OR 380-415 FOR 200/400V RATED MOTORS.

SIX (6) WIRES REQUIRED BETWEEN MOTOR AND CONTROLLER.

NOTES:

1. THREE (3) LEAD AND NINE (9) LEAD MOTORS ***CANNOT*** BE USED FOR WYE-DELTA STARTING.
2. TWELVE (12) LEAD PART WINDING MOTORS ***CANNOT*** BE USED FOR WYE-DELTA STARTING AT 240/230V.

REVISION DESCRIPTION	REV	ECN NO	BY	APP	DATE
UPDATED TITLE BLOCK	B	280820	JMW	TEF	09-12-19
ADDED SINGLE VOLTAGE, 12 LEAD, Y-D MOTORS	A	-	TEF	TEF	11-22-00

THIRD ANGLE PROJECTION	SIZE A	BY	DATE
	DRAWN BY	JMW	09-12-95
	FINAL APPROVAL	TEF	09-12-95

Firetrol, Inc.

© Firetrol, Inc. Not for construction. Subject to change without notice.

MOTOR CONNECTIONS — FTA1300 / FTA1350

OPEN/CLOSED TRANSITION WYE-DELTA FIRE PUMP CONTROLLERS

DRAWING NUMBER NS1300-01

DWG REV B | ECN NO 280820 | SHEET 1 OF 1

All rights reserved. The drawing and the information contained or depicted herein are the sole property of Firetrol, Inc. Copies are communicated to the recipient in strict confidence and may not be retransmitted, published, reproduced, copied or used in any manor, including as the basis for the manufacture or sale of any products, without the express prior written consent of Firetrol, Inc.

Firetrol

Mark IIXG Electric Fire Pump Controllers

Wiring Schematic

FTA1300 / FTA950

Wye-Delta Open Transition Starting
With Power Transfer Switch

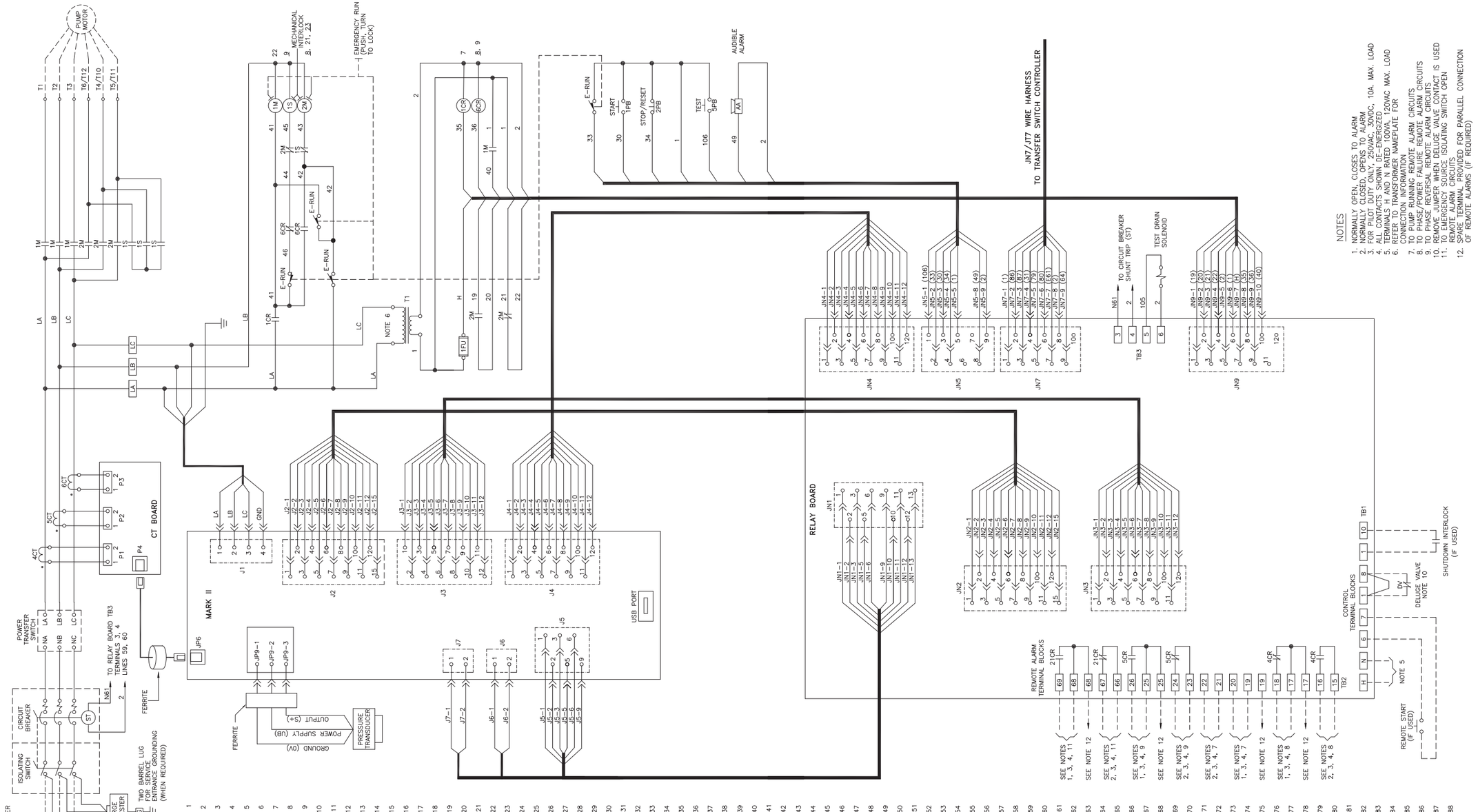

REV	ECN NO	BY	APP	DATE
UPDATED TITLE BLOCK	E	280820	JMW	TEF	09-12-19
ADDED TEST SOLENOID & AUDIBLE ALARM TO COMPLY WITH NEW FM STD	D	228528	JC	TEF	08-31-10

THIRD ANGLE PROJECTION	SIZE B	BY	DATE
	DRAWN BY	TEF	05-04-02
	FINAL APPROVAL	TEF	05-04-02

Firetrol, Inc.

© Firetrol, Inc. Not for construction.
Subject to change without notice.

WIRING SCHEMATIC — FTA1300 WITH FTA950

OPEN TRANSITION WYE-DELTA FIRE PUMP CONTROLLER WITH POWER TRANSFER SWITCH

DRAWING NUMBER WS1300-55

DWG REV E | ECN NO 280820 | SHEET 1 OF 1

All rights reserved. The drawing and the information contained or depicted herein are the sole property of Firetrol, Inc. Copies are communicated to the recipient in strict confidence and may not be retransmitted, published, reproduced, copied or used in any manor, including as the basis for the manufacture or sale of any products, without the express prior written consent of Firetrol, Inc.

Firetrol

Power Transfer Switches

Wiring Schematic

FTA950

Assembled With Electric Fire Pump Controllers

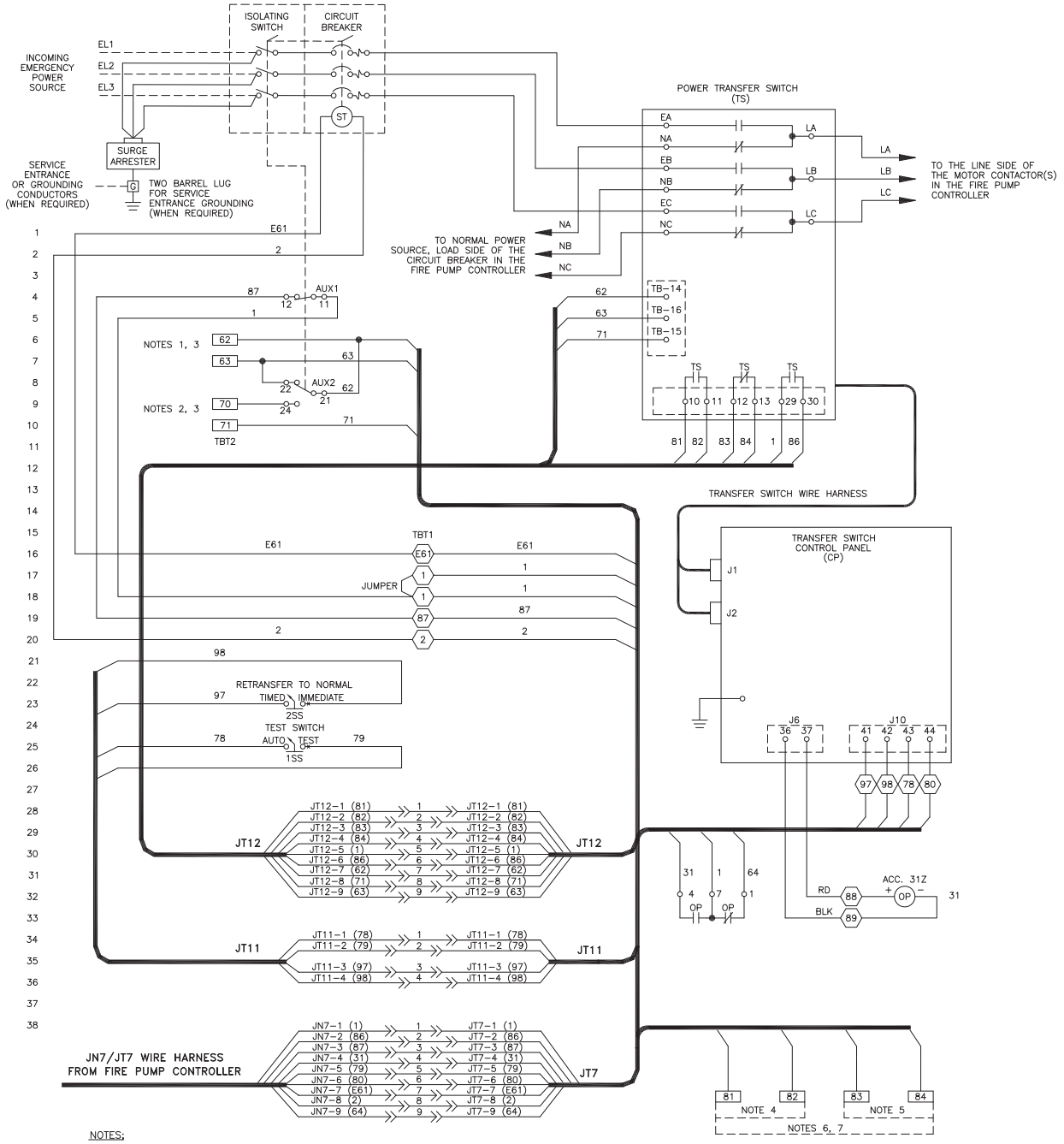

NOTES:

1 – NORMALLY CLOSED, OPENS TO START GENERATOR
2 – NORMALLY OPEN, CLOSES TO START GENERATOR
3 – GEN-SET START CONTACTS RATED 1/2 AMP, 30 VDC
4 – NORMALLY OPEN, CLOSES IN EMERGENCY
5 – NORMALLY CLOSED, OPENS IN EMERGENCY
6 – TRANSFER SWITCH POSITION REMOTE ALARM CONTACTS
7 – CONTACT RATING 5 AMP. MAX. 240 VAC, 28 VDC

COMPONENT LOCATION

AUX1 – AUXILIARY SWITCH 1, CLOSES WHEN EMERGENCY ISOLATING IS OPENED – LINE 4
AUX2 – AUXILIARY SWITCH 2, INHIBITS GEN-SET FROM STARTING IF EMERGENCY ISOLATING SWITCH IS OPENED – LINES 8, 9

– FIELD CONNECTION TERMINAL BLOCK

– INTERCONNECTION TERMINAL BLOCK (FOR FACTORY USE ONLY)

REVISION DESCRIPTION	REV	ECN NO	BY	APP	DATE
UPDATED TITLE BLOCK	B	281357	JMW	TEF	10-16-19
UPDATED TO COMPLY WITH NEW FM STANDARD	A	228528	JC	TEF	08-31-10

	SIZE	BY	DATE
THIRD ANGLE PROJECTION	A		
	DRAWN BY	TEF	05-25-10
	FINAL APPROVAL	TEF	05-25-10

Firetrol, Inc.

© Firetrol, Inc. Not for construction. Subject to change without notice.

WIRING SCHEMATIC | FTA950

FIRE PUMP POWER TRANSFER SWITCH FOR GEN-SET AND SECOND UTILITY POWER SOURCE

DRAWING NUMBER WS950-55

DWG REV B | ECN NO 281357 | SHEET 1 OF 1

All rights reserved. The drawing and the information contained or depicted herein are the sole property of Firetrol, Inc. Copies are communicated to the recipient in strict confidence and may not be retransmitted, published, reproduced, copied or used in any manor, including as the basis for the manufacture or sale of any products, without the express prior written consent of Firetrol, Inc.