Submittal Package
FTA1930

Mark IIXG Electric Fire Pump Controller

Digital Solid State Reduced Current Starting

STANDARD WITHSTAND RATINGS 200–600V – 100,000 Amps RMS Sym. INTERMEDIATE WITHSTAND RATINGS 200–600V – 150,000 Amps RMS Sym. HIGH WITHSTAND RATINGS 200–600V – 200,000 Amps RMS Sym.	
LINE VOLTAGE	MOTOR HORSEPOWER
200	☐ 75–100
208	☐ 75–125
220–240	☐ 75–125
380–415	☐ 125–200
440–480	☐ 200–250
550–600	☐ 200–300

(DRAWINGS INCLUDED IN THIS PACKAGE ARE FOR STANDARD CONTROLLERS. ACTUAL "AS BUILT" DRAWINGS MAY DIFFER FROM THOSE SEEN HERE).

Firetrol, Inc.
3412 Apex Peakway
Apex, North Carolina 27502
P 919 460-5200
F 919 460 5250
www.firetrol.com

While every precaution has been taken to ensure accuracy and completeness herein, Firetrol, Inc. assumes no responsibility, and disclaims all liability, for damages resulting from use of this information or for any errors or omissions. Specifications and drawings are subject to change without notice. ©2019 Firetrol, Inc., All Rights Reserved.

Publication SBP1930-57 Rev. J

Firetrol Mark IIXG Electric Fire Pump Controller

FTA1930 - Digital Solid State Reduced Current Starting

Specifications

1.0 Main Fire Pump Controller

The main fire pump controller shall be a factory assembled, wired and tested unit. The controller shall be of the combined manual and automatic type designed for digital solid state (soft) starting of the fire pump motor having the horsepower, voltage, phase and frequency rating shown on the plans and drawings.

1.1 Standards, Listings & Approvals

The controller shall conform to all the requirements of the latest editions of:
NFPA 20, *Standard for the Installation of Stationary Pumps for Fire Protection*
NFPA 70, *National Electrical Code*.

The controller shall be listed by:
Underwriters Laboratories, Inc., in accordance with UL218, *Standard for Fire Pump Controllers* Canadian Standards Association CSA-C22.2, *Standard for Industrial Control Equipment* (cUL)
CE - Low Voltage Directive

The controller shall be approved by:
Factory Mutual (IEC 62091)
The City of New York for fire pump service

1.2 Enclosure

The controller components shall be housed in a NEMA Type 2 (IEC IP22) drip-proof, wall mounted enclosure.

1.3 Withstand Ratings (Short Circuit Current Ratings)

All controller components shall be front mounted, wired and front accessible for maintenance. The minimum withstand rating of the controllers shall not be less than 100,000 Amps RMS Symmetrical at 200-600 Volts*. If the available system fault current exceeds these ratings, the controllers shall be supplied with a withstand rating of 150,000 or 200,000 Amps RMS Symmetrical, as required.

*Note: 100,000 Amp withstand rating not available in some larger horsepowers. Consult factory for details.

1.4 Isolation Switch and Circuit Breaker

The controller shall include a motor rated combination isolating disconnect switch/circuit breaker, mechanically interlocked and operated with a single, externally mounted handle. When moving the handle from OFF to ON, the interlocking mechanism shall sequence the isolating disconnect switch ON first, and then the circuit breaker. When the handle is moved from ON to OFF, the interlocking mechanism shall sequence the circuit breaker OFF first, and then the isolating disconnect switch.
The isolating disconnect switch/circuit breaker shall be mechanically interlocked so that the enclosure door cannot be opened with the handle in the ON position except by a hidden tool operated bypass mechanism. The isolating disconnect switch/circuit breaker shall be capable of being padlocked in the OFF position for installation and maintenance safety, and shall also be capable of being locked in the ON position without affecting the tripping characteristics of the circuit breaker. The controller door shall have a locking type handle and three point cam and roller vault type hardware. The circuit breaker trip curve adjustment shall be factory set, tested and sealed for the full load amps of the connected motor. The circuit breaker shall be capable of being

field tested to verify actual pick up, locked rotor, and instantaneous trip points after field installation without disturbing incoming line and load conductors.

1.5 Operator Interface

The fire pump controller shall feature an operator interface with user keypad. The interface shall monitor and display motor operating conditions, including all alarms, events, and pressure conditions. All alarms, events, and pressure conditions shall be displayed with a time and date stamp. The display shall be a 128x64 Backlit LCD capable of customized graphics. The display and interface shall be NEMA rated for Type 2, 3R, 4, 4X, and 12 protection and shall be fully accessible without opening the controller door. The display and user interface shall utilize multiple levels of password protection for system security. A minimum of 3 password levels shall be provided.

1.6 Ammeter/Voltmeter

The fire pump controller operator interface shall be capable of displaying true RMS digital motor voltage and current measurements for all three phases simultaneously. Displays requiring push-button and selector switches to toggle between phases or current and voltage shall not be accepted.
Voltage and current shall be measured by True RMS technology to provide the most accurate measurement for all sine waves, including non-sinusoidal waveforms. Average responding meters will not be accepted.

1.7 Digital Status/Alarm Messages

The digital display shall indicate text messages for the status and alarm conditions of:

- Motor On
- Sequential Start Time
- Minimum Run Time
- Local Start / Off Delay Time
- Remote Start
- Fail to Start
- System Battery Low
- Under Voltage
- Over Voltage
- Locked Rotor Trip
- Over Frequency
- Emergency Start
- Motor Over 320%
- Drive Not Installed
- Motor Overload
- Disk Error
- Printer Error
- Disk Near Full
- Pressure Error

The Sequential Start Timer and Minimum Run Timer/Off Delay Timer shall be displayed as numeric values reflecting the value of the remaining time.

1.8 LED Visual Indicators

LED indicators, visible with the door closed, shall indicate:

- Power Available
- Alarm
- Pump Running
- System Pressure Low
- Remote Start
- Transfer Switch Normal
- Deluge Open
- Transfer Switch Emergency
- Phase Failure
- Phase Reversal
- Interlock On
- Fail To Start
- Motor Overload
- Emerg. Iso. Switch Off
- Automatic Shutdown Disabled
- Overvoltage
- Undervoltage

1.9 Data Logging

The digital display shall monitor the system and log the following data:

- Motor Calls/Starts
- Pump Total Run Time
- Pump Last Run Time
- Total Controller Pwr On Time
- Last Pump Start
- Min/Max System Pressure
- Last Phase Fail/Reversal
- Last Locked Rotor Trip
- Last Locked Rotor Current
- Min/Max Frequency
- Max Starting Currents
- Max Run Currents
- Min/Max Voltage per Phase while idle (not running)
- Min Voltage per Phase during Start
- Min/Max Voltage per Phase during Run

2.0 Event Recording

Memory - The controller shall record all operational and alarm events to system memory. All events shall be time and date stamped and include an index number. The system memory shall have the capability of storing 3000 events and allow the user access to the event log via the user interface. The user shall have the ability to scroll through the stored messages in groups of 1 or 10.

2.1 USB Host Controller

The controller shall have a built-in USB Host Controller. A USB port capable of accepting a USB Flash Memory Disk shall be provided. The controller shall save all operational and alarm events to the flash memory on a daily basis. Each saved event shall be time and date stamped. The total amount of historical data saved shall solely depend on the size of the flash disk utilized. The controller shall have the capability to save settings and values to the flash disk on demand via the user interface.

2.2 Serial Communications

The controller shall feature a RS485 serial communications port for use with 2 or 4 wire Modbus RTU communications.

2.3 Solid State Pressure Transducer

The controller shall be supplied with a solid state pressure transducer with a range of 0-300 psi (0-20.7 bar) ±1 psi. The solid state pressure switch shall be used for both display of the system pressure and control of the fire pump controller. Systems using analog pressure devices or mercury switches for operational control will not be accepted.
The START, STOP and SYSTEM PRESSURE shall be digitally displayed and adjustable through the user interface. The pressure transducer shall be mounted inside the controller to prevent accidental damage. The pressure transducer shall be directly pipe mounted to a bulkhead pipe coupling without any other supporting members. Field connections shall be made externally at the controller coupling to prevent distortion of the pressure switch element and mechanism.

2.4 Seismic Certification

The controller shall be certified to meet or exceed the requirements of the 2012 International Building Code and the 2013 California Building Code for Importance Factor 1.5 Electrical Equipment for Sds equal to 1.88 or less severe seismic regions. Qualifications shall be based upon successful tri-axial shake-table testing in accordance with ICC-ES AC-156. Certification without testing shall be unacceptable. Controller shall be clearly labeled as rated for installation in seismic areas and a Certificate of Conformance shall be provided with the controller.
NOTE: Not available on Model FTA1500 Controllers

2.5 Controller Operation

A digitally set On Delay (Sequential Start) timer shall be provided as standard. Upon a call to start, the user interface shall display a message indicating the remaining time value of the On Delay timer.

The controller shall be field programmable for manual stop or automatic stop. If set for automatic stopping, the controller shall allow the user to select either a Minimum Run Timer or an Off Delay Timer. Both timers shall be programmable through the user interface.

A nonadjustable restart delay timer shall be provided to allow the residual voltage of the motor to decay prior to restarting the motor. At least 2 seconds, but no more than 3 seconds, shall elapse between stopping and restarting the pump motor.

A weekly test timer shall be provided as standard. The controller shall have the ability to program the time, date, and frequency of the weekly test. In addition, the controller

shall have the capability to display a preventative maintenance message for a service inspection. The message text and frequency of occurrence shall be programmable through the user interface.

A Lamp Test feature shall be included. The user interface shall also have the ability to display the status of the system inputs and outputs.

An Audible Test feature shall be included to test the operation of the audible alarm device.

The controller shall not start the fire pump motor under a single-phase condition. If the motor is already running when a phase loss occurs, the controller shall continue to run the motor, but still display a Phase Failure alarm.

The fire pump controller software shall be automatically upgraded through the USB port by simply inserting a flash disk with the new software. Fire pump controllers that require laptop computers, handheld equipment or specialized devices for software upgrades shall be prohibited.

2.6 Manufacturer

The controller shall be a Firetrol brand.

3412 Apex Peakway
Apex, North Carolina 27502
P +1 919 460 5200
F +1 919 460 5250
www.firetrol.com

Firetrol™, Inc.

While every precaution has been taken to ensure accuracy and completeness herein, Firetrol, Inc. assumes no responsibility, and disclaims all liability, for damages resulting from use of this information or for any errors or omissions. Specifications and drawings are subject to change without notice. ©2019 Firetrol, Inc., All Rights Reserved.

Publication SP1930-50 Rev. G

Product Description

FTA1930

Mark IIXG Electric Fire Pump Controllers — Digital Solid State Reduced Current Starting

Description—Firetrol® FTA1930 Digital Solid State Starting Fire Pump Controllers feature soft start, soft stop and system sensing capabilities that not only provide for reduced current starting, but also offer an improved level of hydro mechanical performance. The controller monitors, displays and records fire pump system information.
When called to run, the motor will accelerate beginning at 100% of motor FLA up to a maximum of 300% FLA while rated torque is reduced to 15%. When stopping, the motor will decelerate to a preset level and pause, allowing for a restart if required, limiting stress in the piping system. If no additional starting causes are present, the motor will continue to decelerate to a full stop. This controller helps to reduce water hammer in the system.

Approvals – Firetrol fire pump controllers are listed by Underwriters' Laboratories, Inc., in accordance with UL218, *Standard for Fire Pump Controllers*, CSA, *Standard for Industrial Control Equipment*, and approved by Factory Mutual. They are built to meet or exceed the requirements of the approving authorities as well as NEMA and the latest editions of NFPA 20, *Installation of Centrifugal Fire Pumps*, and NFPA 70, *National Electrical Code*.

Standard Features—The following are included as standard with each controller:

- Voltage surge protector
- Main Disconnect Switch sized for connected motor horsepower and voltage
- Fire pump Circuit Breaker
- Single handle Isolating Disconnect Switch/ Circuit Breaker mechanism
- Motor contactor
- Emergency Manual Run Mechanism to mechanically close motor contactor contacts in an emergency condition
- Built-in Start and Stop push-buttons to bypass automatic start circuits
- Minimum Run Timer / Off Delay Timer
- Daylight Savings Time Option
- Weekly Test Timer
- Elapsed Time Meter
- Door mounted display/interface panel featuring a 128 x 64 pixel backlit LCD Graphical Display, Membrane Type User Control Push-buttons and easy to read LED Indicators for:
  - POWER AVAILABLE
  - ALARM
  - TRANSFER SWITCH NORMAL (If unit ordered with Automatic Power Transfer Switch)
  - TRANSFER SWITCH EMERGENCY (If unit ordered with Automatic Power Transfer Switch)
  - SYSTEM PRESSURE LOW
  - PUMP RUNNING
  - DELUGE OPEN
  - REMOTE START
  - INTERLOCK ON
  - FAIL TO START
  - MOTOR OVERLOAD
  - EMERGENCY ISO SWITCH OFF (If unit ordered with Automatic Power Transfer Switch)
  - PHASE FAILURE
  - PHASE REVERSAL
  - AUTOMATIC SHUTDOWN DISABLED
  - OVERVOLTAGE
  - UNDERVOLTAGE
- Digital Pressure Display
- USB Host Controller and Port
- Solid State Pressure Transducer
- Data Log
- Event Log (3000 Events)
- True RMS Metering with simultaneous 3 Phase Display of Amps, Volts, Frequency, Pressure and Alarm Messages
- Disk Error message
- Disk Near Full message
- Pressure Error message
- Motor Over 320% message
- Local Start message
- Remote Start message
- Emergency Start message
- Fail To Start message
- Undervoltage message
- Overvoltage message
- NEMA Type 2 (IEC IP22) enclosure
- Suitable for use as Service Equipment
- Each standard controller comes with user set options for:
  - Interlock Alarm
  - Low Pressure Audible
  - Low Suction
  - Pump Run
  - User Defined Input
  - Weekly Test

SPECIAL ENCLOSURES

-E Enclosure, NEMA Type 4 (IP66), Painted Steel
-F Enclosure, NEMA Type 4X (IP66), #304 Stainless Steel, Brushed Finish
-FD Enclosure, NEMA Type 4X (IP66), #316 Stainless Steel, Brushed Finish
-FDB Enclosure, NEMA Type 4X (IP66), #316 Stainless Steel, 12 Gauge, Seam-Welded, Brushed Finish
-FDP Enclosure, NEMA Type 4X (IP66), #316 Stainless Steel, Painted Finish
-FXP Enclosure, NEMA Type 4X (IP66), #304 Stainless Steel, Painted Finish
-G Enclosure, NEMA Type 12 (IP54), Painted Steel
-T Enclosure, NEMA Type 3R (IP24), Painted Steel

CIRCUIT BREAKER OPTION

-N Intermediate withstand rating 150,000 Amps RMS Sym.
-P High withstand rating 200,000 Amps RMS Sym
Note: Intermediate and High withstand ratings may not be available for all horsepowers and voltages. Consult factory for availability.

ANTI-CONDENSATION SPACE HEATERS

-H Space Heater, 120V Externally Powered with Circuit Breaker
-J Space Heater, 120V Externally Powered with Circuit Breaker and Thermostat
-K Space Heater, 120V Externally Powered with Circuit Breaker and Humidistat
-L Space Heater, 240V Externally Powered with Circuit Breaker
-M Space Heater, 240V Externally Powered with Circuit Breaker and Thermostat
-N Space Heater, 240V Externally Powered with Circuit Breaker and Humidistat

PRESSURE TRANSDUCERS

-B Wetted Parts Including Pressure Sensor, 600 psi (42 Bar) Fresh Water
-C Wetted Parts Including Pressure Sensor, 300 psi (21 Bar) Sea Water
-D Wetted Parts Including Pressure Sensor, 600 psi (42 Bar) Fresh Water

COMBINED AUTOMATIC POWER TRANSFER SWITCHES

-TSA FTA950 Automatic Transfer Switch, Group 5
-TSAB FTA951 Automatic Transfer Switch, J-Bypass Isolation, Group 5

ALARMS

-AC Alarm Output Contacts Extra, Pump Operating (1 Form A, 1 Form B)
-AF Alarm, Audible/Visible, Low Pump Room Temperature
-AG Alarm, Audible/Visible, Reservoir Low
-AH Alarm, Audible/Visible, Low Suction Pressure
-AM Alarm Output Contacts, Fail to Start
-AV Alarm Output Contacts, Low Pump Room Temperature (Requires option -AF)
-AW Alarm Output Contacts, Reservoir Low (Requires option -AG)
-AY Alarm Output Contacts, Low Suction Pressure (Requires option -AH)
-BW Alarm Output Contacts, Phase Failure/Phase Reversal
-BY Alarm Output Contacts, Pump Overload
-COM Alarm, Audible/Visible/Output Contacts, Low Suction Pressure with Manual Reset Option, Pressure Switch Not Included (Do Not Use Options AH or AY)
-CTS Alarm, Audible/Visible/Output Contacts, Low Suction Pressure Shutdown with Manual Reset Option and Pressure Switch (Do Not Use Options AH or AY)
-EG Alarm, Audible/Visible, Relief Valve Discharge
-EH Alarm Output Contacts, Relief Valve Discharge (Requires option -EG)
-EJ Alarm, Audible/Visible, Flow Meter On
-EK Alarm Output Contacts, Flow Meter On (Requires option -EJ)
-KH Alarm Output Contacts, Common Alarm
-JR Visible Indicator, Jockey Pump Operating
-JT Alarm, Audible/Visible, Jockey Pump Trouble
-P Alarm, Audible/Visible, Built-In 120V Supervisory System (Includes visible supervisory voltage normal indication and audible pump operating, phase failure and phase reversal indication)
-PE Alarm Output Contacts, Low System Pressure (pump on demand)
-PT Alarm, Audible/Visible, Built-in 240V Supervisory System (Includes visible supervisory voltage normal indication and audible pump operating, phase failure and phase reversal indication)

MISCELLANEOUS

-AZ Thermostat, Low Pump Room Temperature, Mounted and Wired
-ED Output Contacts, Load Shed (Selectable power source and adjustable time delay to remove non-critical loads before starting)
-EL Series Pumping Operation, High Zone Controller
-EM Series Pumping Operation, Mid Zone Controller
-EN Series Pumping Operation, Low Zone Controller
-FZX Rating, Nameplate to be marked 380-400V (Use with voltage code 'F' or 'FZ')
-IEC Marking, CE with External Wet Parts (Requires NEMA Type 12 (IP54) Enclosure as minimum)
-IECI Marking, CE with Internal Wet Parts (Requires NEMA Type 12 (IP54) Enclosure as minimum)
-OSP OSHPD Seismic Certification (State of California) (Requires Option -SEI)
-MZN Neutral Lug, Service Entrance, Non-insulated Bonded to Enclosure
-PK Terminal Blocks, Extra Remote Start
-PY Output Contacts, Motor Space Heater Circuit, Externally Powered
-S Tropicalization
-SEI Marking, Seismic Certified (in accordance with IBC) (Note: Not available on model FTA1500)
-USBX Data Port, External USB
-ZPA Scheduled Service Message (when factory programmed or programmed by Firetrol representative during start-up)
-ZPM Data Port, Serial Modbus RTU Over 2-Wire or 4-Wire RS485
-ZPN Data Port, Serial Modbus RTU Over Ethernet TCP/IP

Export packaging (Wooden crating to conform to IPPC Standards)

Firetrol, Inc.
3412 Apex Peakway
Apex, North Carolina 27502
P +1 919 460 5200
F +1 919 460 5250
www.firetrol.com

While every precaution has been taken to ensure accuracy and completeness herein, Firetrol, Inc. assumes no responsibility, and disclaims all liability, for damages resulting from use of this information or for any errors or omissions. Specifications and drawings are subject to change without notice. ©2019 Firetrol, Inc., All Rights Reserved.

Publication PD1930-50 Rev. K

Mark IIXG Electric Fire Pump Controllers

Model Number Selection Guide

FTA1000 - FTA1930

FTA1000, 1250, 1300, 1350, 1500, 1800, 1930
ELECTRIC FIRE PUMP CONTROLLERS

Example: FTA1300-AM75HH-xx

Starting Method
1000 - Across-the-line (direct on line)
1250 - Part Winding (50%-50% windings)
1300 - Wye-delta (star-delta), open transition
1350 - Wye-delta (star-delta), closed transition
1500 - Primary resistor
1800 - Autotransformer
1930 - Digital Solid-state soft start/stop

Modifications
See Back

Start/Stop Options
A - Automatic start with timed permissive stop after minimum run time and manual start with manual stop, field convertible to automatic start and manual start with manual stop only
B - Automatic start and manual start with manual stop
C - Manual start and stop

Short Circuit Current Rating
M - Standard short circuit rating 100,000 Amperes RMS Sym. at 200 - 600 V
N - Intermediate short circuit rating 150,000 Amperes RMS Sym. at 200 - 600 V
P - High short circuit rating 200,000 Amperes RMS Sym. at 200 - 600 V
Q - Standard intermediate short circuit rating 65,000 Amperes RMS Sym. at 550 - 600 V
R - Standard low short circuit rating 42,000 Amperes RMS Sym. at 550 - 600 V

Three Phase Voltage
A - 220-240 Volt, 60 Hertz (230 V)
AZ - 220-230 Volt, 50 Hertz
B - 440-480 Volt, 60 Hertz (460 V)
BZ - 415 Volt, 50 Hertz
C - 550-600 Volt, 60 Hertz (575 V)
F - 380 Volt, 60 Hertz
FZ - 380 Volt, 50 Hertz
H - 208 Volt, 60 Hertz
HH - 200 Volt, 60 Hertz

Horsepower Rating

03 - 3 HP	100 - 100 HP
05 - 5 HP	125 - 125 HP
07 - 7 1/2 HP	150 - 150 HP
10 - 10 HP	200 - 200 HP
15 - 15 HP	250 - 250 HP
20 - 20 HP	300 - 300 HP
25 - 25 HP	350 - 350 HP
30 - 30 HP	400 - 400 HP
40 - 40 HP	450 - 450 HP
50 - 50 HP	500 - 500 HP
60 - 60 HP	600 - 600 HP
75 - 75 HP	700 - 700 HP

SPECIAL ENCLOSURES

-E Enclosure, NEMA Type 4 (IP66), Painted Steel
-F Enclosure, NEMA Type 4X (IP66), #304 Stainless Steel, Brushed Finish
-FD Enclosure, NEMA Type 4X (IP66), #316 Stainless Steel, Brushed Finish
-FDB Enclosure, NEMA Type 4X (IP66), #316 Stainless Steel, 12 Gauge, Seam-Welded, Brushed Finish
-FDP Enclosure, NEMA Type 4X (IP66), #316 Stainless Steel, Painted Finish
-FXP Enclosure, NEMA Type 4X (IP66), #304 Stainless Steel, Painted Finish
-G Enclosure, NEMA Type 12 (IP54), Painted Steel
-T Enclosure, NEMA Type 3R (IP24), Painted Steel

CIRCUIT BREAKER OPTION

-N Intermediate withstand rating 150,000 Amps RMS Sym.
-P High withstand rating 200,000 Amps RMS Sym
Note: Intermediate and High withstand ratings may not be available for all horsepowers and voltages. Consult factory for availability.

ANTI-CONDENSATION SPACE HEATERS

-H Space Heater, 120V Externally Powered with Circuit Breaker
-J Space Heater, 120V Externally Powered with Circuit Breaker and Thermostat
-K Space Heater, 120V Externally Powered with Circuit Breaker and Humidistat
-L Space Heater, 240V Externally Powered with Circuit Breaker
-M Space Heater, 240V Externally Powered with Circuit Breaker and Thermostat
-N Space Heater, 240V Externally Powered with Circuit Breaker and Humidistat

PRESSURE TRANSDUCERS

-B 0-600 psi (0-42.25 bar) Pressure Transducer for Fresh Water Service
-C 0-300 psi (0-21.1 bar) Pressure Transducer for Copper Corrosive Service
-D 0-600 psi (0-42.25 bar) Pressure Transducer for Corrosive Service

COMBINED AUTOMATIC POWER TRANSFER SWITCHES

-TSA FTA950 Automatic Transfer Switch, Group 5
-TSAB FTA951 Automatic Transfer Switch, J-Bypass Isolation, Group 5

ALARMS

-AC Alarm Output Contacts Extra, Pump Operating (1 Form A, 1 Form B)
-AF Alarm, Audible/Visible, Low Pump Room Temperature
-AG Alarm, Audible/Visible, Reservoir Low
-AH Alarm, Audible/Visible, Low Suction Pressure
-AM Alarm Output Contacts, Fail to Start
-AV Alarm Output Contacts, Low Pump Room Temperature (Requires option -AF)
-AW Alarm Output Contacts, Reservoir Low (Requires option -AG)
-AY Alarm Output Contacts, Low Suction Pressure (Requires option -AH)
-BW Alarm Output Contacts, Phase Failure/Phase Reversal
-BY Alarm Output Contacts, Pump Overload
-COM Alarm, Audible/Visible/Output Contacts, Low Suction Pressure with Manual Reset Option, Pressure Switch Not Included (Do Not Use Options AH or AY)
-CTS Alarm, Audible/Visible/Output Contacts, Low Suction Pressure Shutdown with Manual Reset Option and Pressure Switch (Do Not Use Options AH or AY)
-EG Alarm, Audible/Visible, Relief Valve Discharge
-EH Alarm Output Contacts, Relief Valve Discharge (Requires option -EG)
-EJ Alarm, Audible/Visible, Flow Meter On
-EK Alarm Output Contacts, Flow Meter On (Requires option -EJ)
-KH Alarm Output Contacts, Common Alarm
-JR Visible Indicator, Jockey Pump Operating
-JT Alarm, Audible/Visible, Jockey Pump Trouble
-P Alarm, Audible/Visible, Built-In 120V Supervisory System (Includes visible supervisory voltage normal indication and audible pump operating, phase failure and phase reversal indication)
-PE Alarm Output Contacts, Low System Pressure (pump on demand)
-PT Alarm, Audible/Visible, Built-in 240V Supervisory System (Includes visible supervisory voltage normal indication and audible pump operating, phase failure and phase reversal indication)

MISCELLANEOUS

-AZ Thermostat, Low Pump Room Temperature, Mounted and Wired
-ED Output Contacts, Load Shed (Selectable power source and adjustable time delay to remove non-critical loads before starting)
-EL Series Pumping Operation, High Zone Controller
-EM Series Pumping Operation, Mid Zone Controller
-EN Series Pumping Operation, Low Zone Controller
-FZX Rating, Nameplate to be marked 380-400V (Use with voltage code 'F' or 'FZ')
-IEC Marking, CE with External Wet Parts (Requires NEMA Type 12 (IP54) Enclosure as minimum)
-IECI Marking, CE with Internal Wet Parts (Requires NEMA Type 12 (IP54) Enclosure as minimum)
-OSP OSHPD Seismic Certification (State of California) (Requires Option -SEI)
-MZN Neutral Lug, Service Entrance, Non-insulated Bonded to Enclosure
-PK Terminal Blocks, Extra Remote Start
-PY Output Contacts, Motor Space Heater Circuit, Externally Powered
-S Tropicalization
-SEI Marking, Seismic Certified (in accordance with IBC) (Note: Not available on model FTA1500)
-USBX Data Port, External USB
-ZPA Scheduled Service Message (when factory programmed or programmed by Firetrol representative during start-up)
-ZPM Data Port, Serial Modbus RTU Over 2-Wire or 4-Wire RS485
-ZPN Data Port, Serial Modbus RTU Over Ethernet TCP/IP

Export packaging (Wooden crating to conform to IPPC Standards)
FTA1000 - 1930

Firetrol, Inc.
3412 Apex Peakway
Apex, North Carolina 27502
P +1 919 460 5200
F +1 919 460 5250
www.firetrol.com

While every precaution has been taken to ensure accuracy and completeness herein, Firetrol, Inc. assumes no responsibility, and disclaims all liability, for damages resulting from use of this information or for any errors or omissions. Specifications and drawings are subject to change without notice. ©2019 Firetrol, Inc., All Rights Reserved.

Publication SD1000-50 Rev. L

Firetrol

Mark IIXG Electric Fire Pump Controllers

General Starting Configuration

FTA1930

Digital Solid State Reduced Current Starting

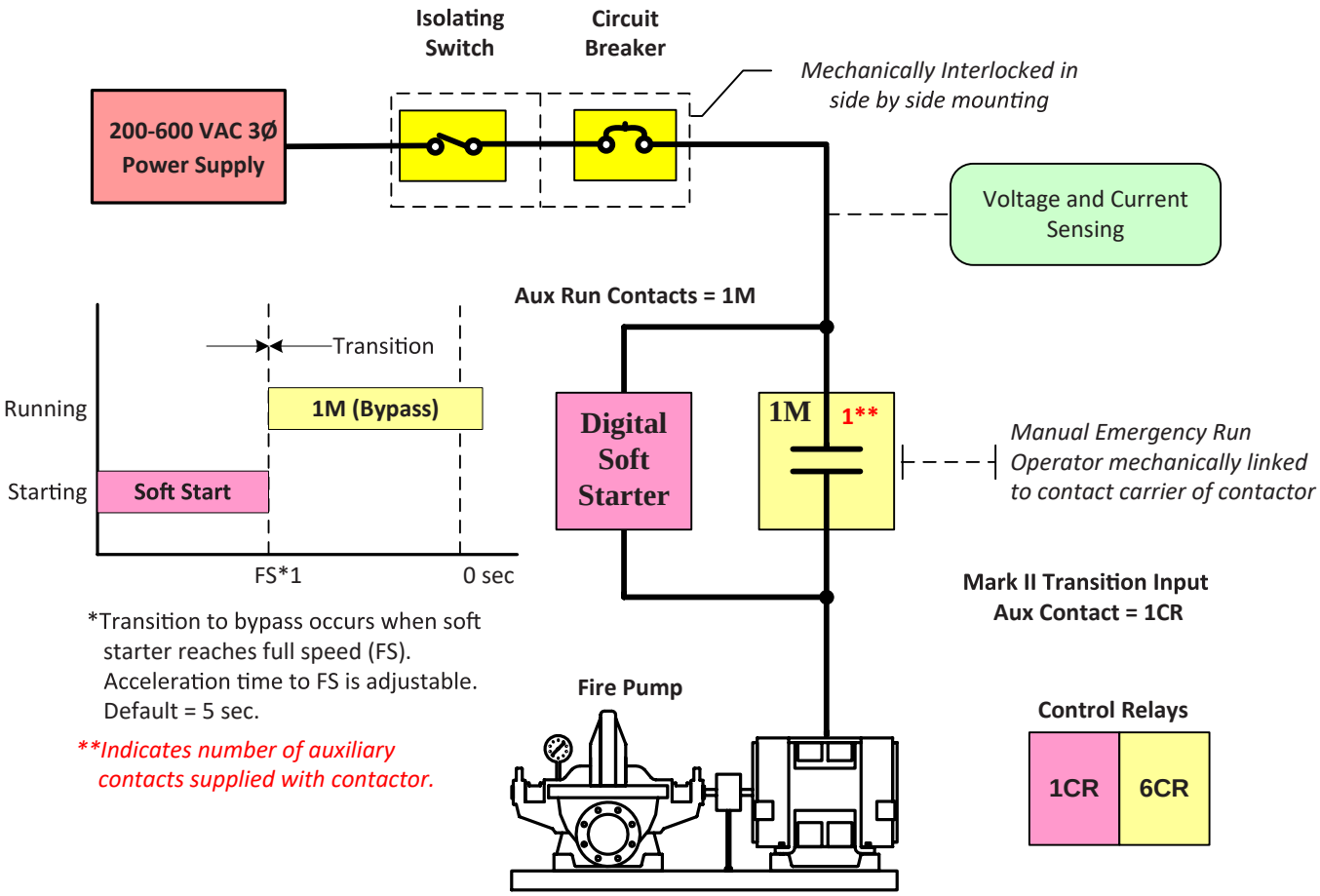

*Transition to bypass occurs when soft starter reaches full speed (FS). Acceleration time to FS is adjustable. Default = 5 sec.

***Indicates number of auxiliary contacts supplied with contactor.*

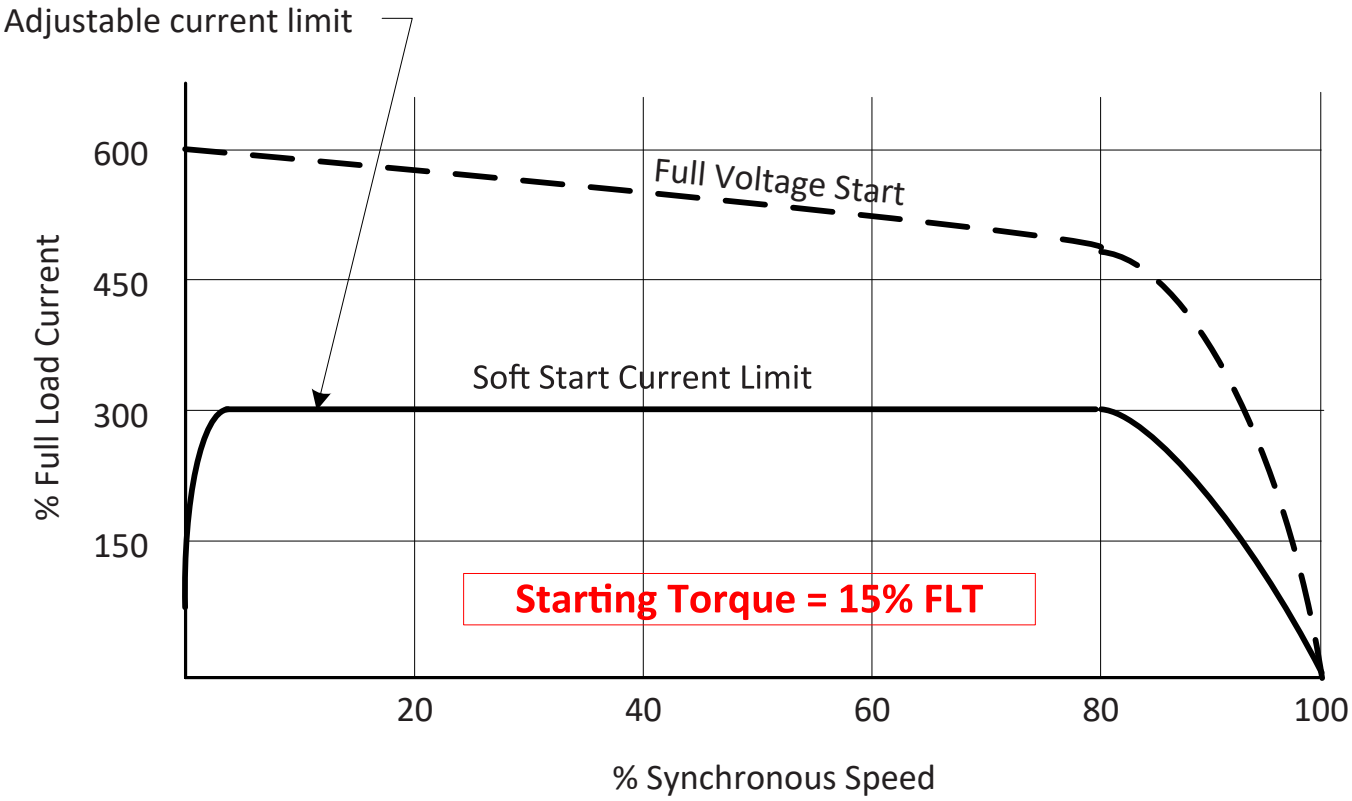

Firetrol, Inc.
3412 Apex Peakway
Apex, North Carolina 27502
P +1 919 460 5200
F +1 919 460 5250
www.firetrol.com

While every precaution has been taken to ensure accuracy and completeness herein, Firetrol, Inc. assumes no responsibility, and disclaims all liability, for damages resulting from use of this information or for any errors or omissions. Specifications and drawings are subject to change without notice. ©2019 Firetrol, Inc., All Rights Reserved.

Publication GS1930-01 Rev. C

Dimensions and Shipping Weight

FTA1930

Mark IIXG Electric Fire Pump Controllers

Digital Solid State Reduced Current Starting

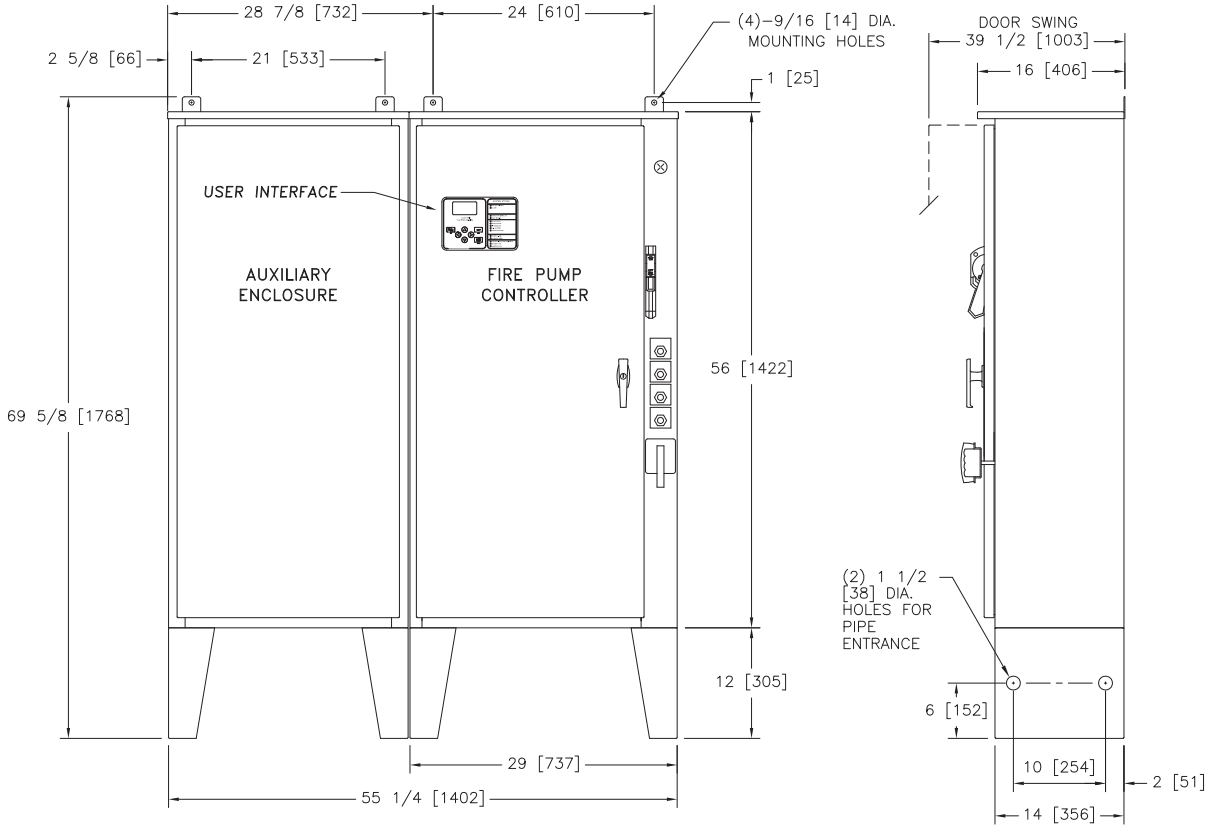

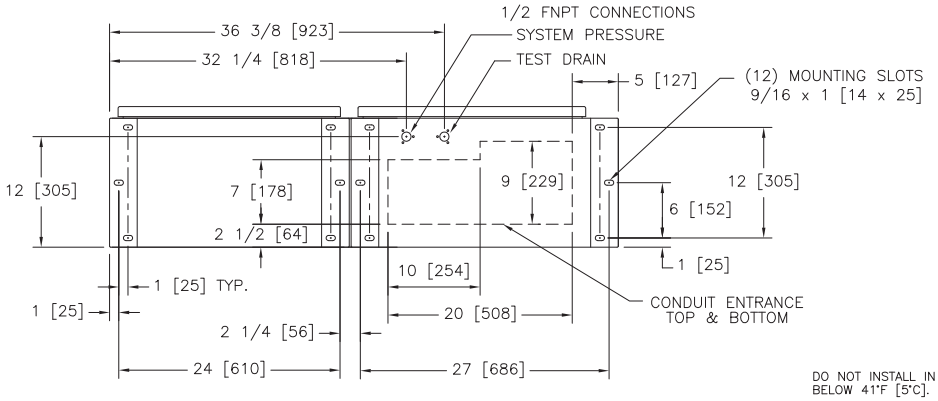

STANDARD WITHSTAND RATINGS 200–600V – 100,000 Amps RMS Sym. INTERMEDIATE WITHSTAND RATINGS 200–600V – 150,000 Amps RMS Sym. HIGH WITHSTAND RATINGS 200–600V – 200,000 Amps RMS Sym.	
LINE VOLTAGE	MOTOR HORSEPOWER
200	☐ 75–100
208	☐ 75–125
220–240	☐ 75–125
380–415	☐ 125–200
440–480	☐ 200–250
550–600	☐ 200–300

APPROXIMATE SHIPPING WEIGHT
520 [236]

DO NOT INSTALL IN AMBIENT TEMPERATURES BELOW 41°F [5°C].

ALL DIMENSIONS – INCHES [MM]
SHIPPING WEIGHT – POUNDS [KG]

THIS DIMENSION DRAWING COVERS FTA1930 CONTROLLERS AT THE HORSEPOWER, VOLTAGE AND WITHSTAND RATINGS AS LISTED IN THE TABLE. FOR OTHER HORSEPOWER OR WITHSTAND RATINGS, REFER TO ED1930–02

SPECIFICATIONS AND DIMENSIONS SUBJECT TO CHANGE WITHOUT NOTICE. DO NOT USE FOR CONSTRUCTION. REQUEST CONSTRUCTION DRAWINGS FROM FIRETROL OR YOUR LOCAL

REVISION DESCRIPTION	REV	ECN NO	BY	APP	DATE
UPDATED TITLE BLOCK	D	281239	JMW	TEF	10-07-19
REVISED MOTOR HORSEPOWER CHART	C	237408	JMW	TEF	06-04-12

	SIZE A	BY	DATE
THIRD ANGLE PROJECTION	DRAWN BY	TEF	05-29-08
	FINAL APPROVAL	TEF	05-29-08

Firetrol, Inc.

© Firetrol, Inc. Not for construction. Subject to change without notice.

DIMENSIONS AND SHIPPING WEIGHT | FTA1930

DIGITAL SOLID STATE REDUCED CURRENT FIRE PUMP CONTROLLER

DRAWING NUMBER DD1930-57

DWG REV D | ECN NO 281239 | SHEET 1 OF 1

All rights reserved. The drawing and the information contained or depicted herein are the sole property of Firetrol, Inc. Copies are communicated to the recipient in strict confidence and may not be retransmitted, published, reproduced, copied or used in any manor, including as the basis for the manufacture or sale of any products, without the express prior written consent of Firetrol, Inc.

Field Connections

FTA1930

Mark IIXG Electric Fire Pump Controllers

Digital Solid State Reduced Voltage Starting

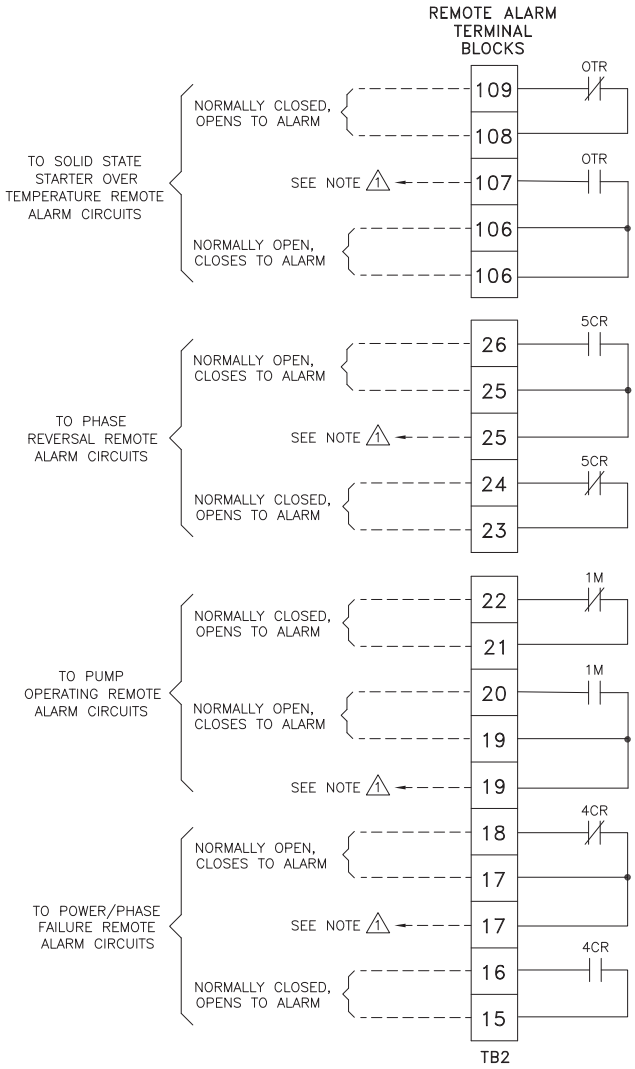

1 SPARE TERMINALS PROVIDED FOR PARALLEL CONNECTION OF REMOTE ALARMS (IF REQUIRED)

NOTE: TERMINALS FOR CUSTOMER CONNECTIONS REQUIRE 3.5MM SLOTTED SCREW DRIVER

TERMINAL TIGHTENING TORQUE		
TERMINAL TYPE	WIRE SIZE	TIGHTENING TORQUE
CONTROL AND ALARM TERMINALS	#14–12 AWG [2.5–4 MM^2]	5.6 lb–in [.6 Nm]

–NOTE–
ALARM CONTACT RATING PILOT DUTY 250 VAC, 30 VDC 10 A. MAX. LOAD

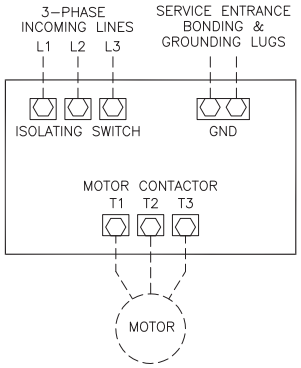

NOTES

1– Incoming line terminals are provided to accommodate wire sizes at 125% of motor full load current per NFPA 70–2008, ***National Electrical Code***, Table 430–250, Section 695.6(c), and Table 310–16, 75° rated Copper conductors.

2– Controller is phase rotation sensitive. Incoming lines L1, L2 and L3 must be in ABC, right hand rotation sequence for proper operation of the phase monitor.

3– Motor connections shown are typical. Since motor connections vary widely, refer to the motor connection diagram for specific wiring arrangement.

4– For Incoming line terminals and motor terminals field wire capacity refer to drawing FC1900–51

NOTE: USE COPPER CONDUCTORS ONLY FOR ALL CONNECTIONS

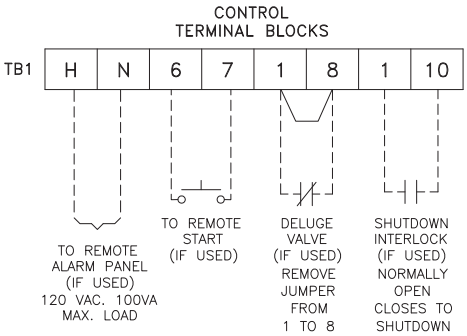

PRESSURE SYSTEM CONNECTION 1/2" FNPT

REVISION DESCRIPTION	REV	ECN NO	BY	APP	DATE
UPDATED TITLE BLOCK	B	281239	JMW	TEF	10-09-19
ADD NOTE FOR COPPER CONDUCTORS ONLY, UPDATED LOGO & TITLE BLOCK	A	226253	JC	TEF	12-08-09

	SIZE	BY	DATE
THIRD ANGLE PROJECTION	A		
	DRAWN BY	TEF	05-29-08
	FINAL APPROVAL	TEF	05-29-08

Firetrol, Inc.

© Firetrol, Inc. Not for construction. Subject to change without notice.

FIELD CONNECTIONS FTA1930

DIGITAL SOLID STATE REDUCED CURRENT FIRE PUMP CONTROLLERS

DRAWING NUMBER FC1930-50

DWG REV B | ECN NO 281239 | SHEET 1 OF 2

All rights reserved. The drawing and the information contained or depicted herein are the sole property of Firetrol, Inc. Copies are communicated to the recipient in strict confidence and may not be retransmitted, published, reproduced, copied or used in any manor, including as the basis for the manufacture or sale of any products, without the express prior written consent of Firetrol, Inc.

Field Connections

FTA1930

Mark IIXG Electric Fire Pump Controllers

Digital Solid State Reduced Voltage Starting

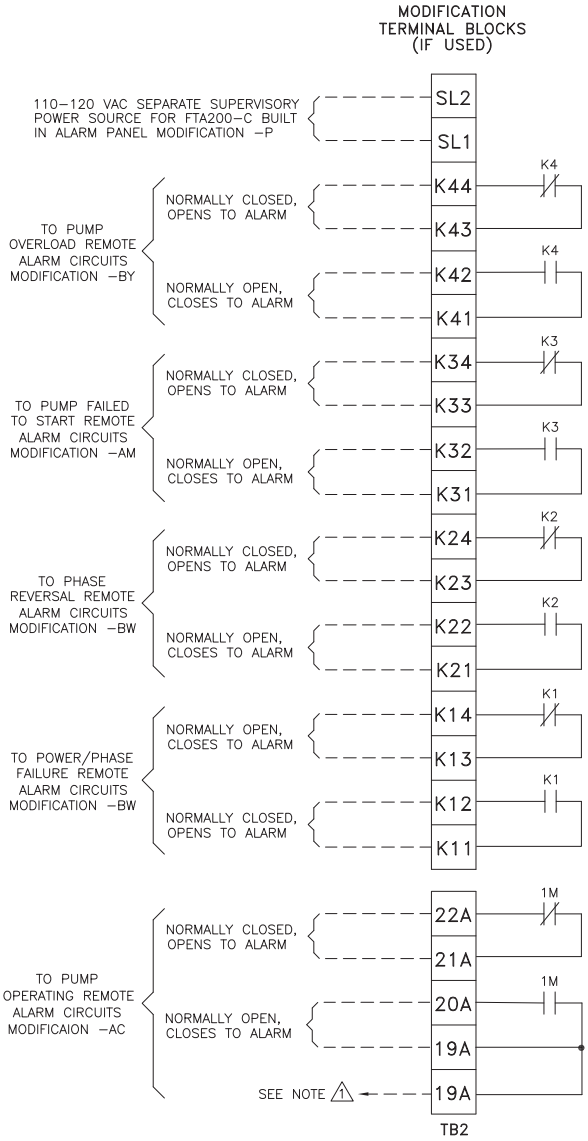

1 SPARE TERMINALS PROVIDED FOR PARALLEL CONNECTION OF REMOTE ALARMS (IF REQUIRED)

NOTE: TERMINALS FOR CUSTOMER CONNECTIONS REQUIRE 3.5MM SLOTTED SCREW DRIVER

TERMINAL TIGHTENING TORQUE		
TERMINAL TYPE	WIRE SIZE	TIGHTENING TORQUE
CONTROL AND ALARM TERMINALS	#14–12 AWG [2.5–4 MM^2]	5.6 lb–in [.6 Nm]

–NOTE–
ALARM CONTACT RATING PILOT DUTY 250 VAC, 30 VDC 10 A. MAX. LOAD

NOTE: USE COPPER CONDUCTORS ONLY FOR ALL CONNECTIONS

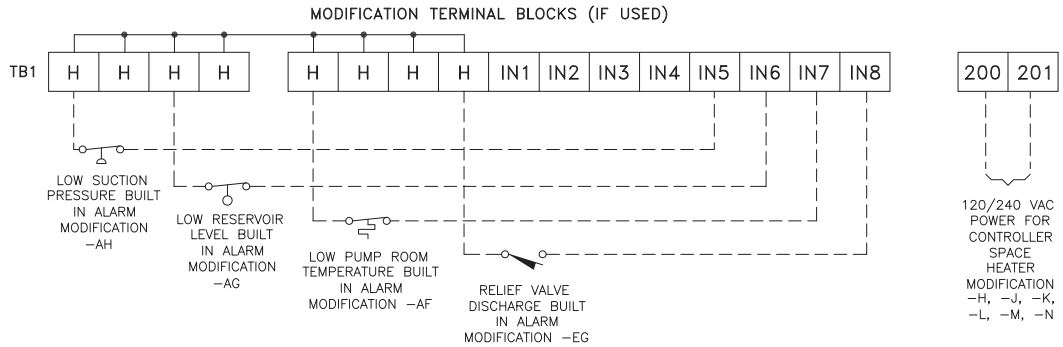

REVISION DESCRIPTION	REV	ECN NO	BY	APP	DATE
UPDATED TITLE BLOCK	B	281239	JMW	TEF	10-09-19
ADD NOTE FOR COPPER CONDUCTORS ONLY, UPDATED LOGO & TITLE BLOCK	A	226253	JC	TEF	12-08-09

	SIZE A	BY	DATE
THIRD ANGLE PROJECTION	DRAWN BY	TEF	05-29-08
	FINAL APPROVAL	TEF	05-29-08

Firetrol, Inc.

© Firetrol, Inc. Not for construction. Subject to change without notice.

FIELD CONNECTIONS FTA1930

DIGITAL SOLID STATE REDUCED CURRENT FIRE PUMP CONTROLLERS

DRAWING NUMBER FC1930-50

DWG REV B | ECN NO 281239 | SHEET 2 OF 2

All rights reserved. The drawing and the information contained or depicted herein are the sole property of Firetrol, Inc. Copies are communicated to the recipient in strict confidence and may not be retransmitted, published, reproduced, copied or used in any manor, including as the basis for the manufacture or sale of any products, without the express prior written consent of Firetrol, Inc.

Firetrol

Mark IIXG Electric Fire Pump Controllers

Field Connections

FTA1930

Digital Solid State Reduced Current Starting
Line & Motor Wire Terminal Capacity

LINE TERMINALS–WIRE CAPACITY AND QUANTITY (CU) (1)

MAXIMUM MOTOR HORSEPOWER						WIRE SIZE (CU) PER PHASE	WIRE SIZE SERVICE ENTRANCE GROUND LUG (CU) (2)
200V	208V	220–240V	380–415V	440–480V	550–600V		
20	20	25	40	50	60	(1) #14 AWG–#1/0 AWG (1) 2.5 MM^2–50 MM^2	(2) #14 AWG–#2/0 AWG (2) 2.5 MM^2–70 MM^2
40	40	40	75	100	125	(1) #4 AWG–300 kcmil (1) 25 MM^2–150 MM^2	(2) #14 AWG–#2/0 AWG (2) 2.5 MM^2–70 MM^2
60	60	60	100	150	150	(1) #4 AWG–300 kcmil (1) 25 MM^2–150 MM^2	(2) #6 AWG–250 kcmil (2) 16 MM^2–120 MM^2
100	100	100	150	250	300	(1) 250 kcmil–500 kcmil (1) 120 MM^2–240 MM^2	(2) #6 AWG–250 kcmil (2) 16 MM^2–120 MM^2
---	125	125	200	---	---	(2) #3/0 AWG–250 kcmil (2) 95 MM^2–120 MM^2	(2) #6 AWG–250 kcmil (2) 16 MM^2–120 MM^2
200	200	250	350	500	---	(3) #2/0 AWG–400 kcmil (3) 70 MM^2 –200 MM^2	(2) #6 AWG–250 kcmil (2) 16 MM^2–120 MM^2
250	250	300	500	600	---	(4) #4/0 AWG–500 kcmil (4) 100 MM^2–240 MM^2	(2) #6 AWG–250 kcmil (2) 16 MM^2–120 MM^2

MOTOR TERMINALS–WIRE CAPACITY AND QUANTITY (CU) (1)

MAXIMUM MOTOR HORSEPOWER						WIRE SIZE (CU) PER PHASE
200V	208V	220–240V	380–415V	440–480V	550–600V	
30	30	40	60	75	100	(1) #6 AWG–#2/0 AWG (1) 16 MM^2–70 MM^2
50	50	60	75	125	150	(1) #6 AWG–250 kcmil (1) 16 MM^2–120 MM^2
75	75	100	150	200	250	(1) #4 AWG–400 kcmil (1) 25 MM^2–200 MM^2
100	100	---	---	250	300	(2) #4 AWG–500 kcmil (2) 25 MM^2–240 MM^2
200	200	200	350	500	---	(2) 250 kcmil–500 kcmil (2) 120 MM^2–240 MM^2
250	250	250	450	600	---	(3) #2/0 AWG–500 kcmil (3) 70 MM^2–240 MM^2

(1) FOR CORRECT WIRE SIZING, REFER TO *NATIONAL ELECTRICAL CODE,* NFPA 70.

(2) WHEN REQUIRED BY AUTHORITY HAVING JURISDICTION.

REVISION DESCRIPTION	REV	ECN NO	BY	APP	DATE
UPDATED TITLE BLOCK	D	281239	JMW	TEF	10-12-19
UPDATED LINE TERMINAL HP/VOLTAGE CHART, CHG'D TO XT4 BREAKERS	C	270091	TEF	TEF	11/30/17

	SIZE	BY	DATE
THIRD ANGLE PROJECTION	A		
	DRAWN BY	TEF	05-06-02
	FINAL APPROVAL	TEF	05-06-02

Firetrol, Inc.

© Firetrol, Inc. Not for construction. Subject to change without notice.

FIELD CONNECTIONS FTA1930

SOLID STATE REDUCED CURRENT FIRE PUMP CONTROLLER
LINE AND MOTOR FIELD WIRE TERMINAL CAPACITY

DRAWING NUMBER FC1900-51

DWG REV D | ECN NO 281239 | SHEET 1 OF 1

All rights reserved. The drawing and the information contained or depicted herein are the sole property of Firetrol, Inc. Copies are communicated to the recipient in strict confidence and may not be retransmitted, published, reproduced, copied or used in any manor, including as the basis for the manufacture or sale of any products, without the express prior written consent of Firetrol, Inc.

Firetrol

Mark IIXG Electric Fire Pump Controllers

Wiring Schematic

FTA1930

Digital Solid State Reduced Current Starting

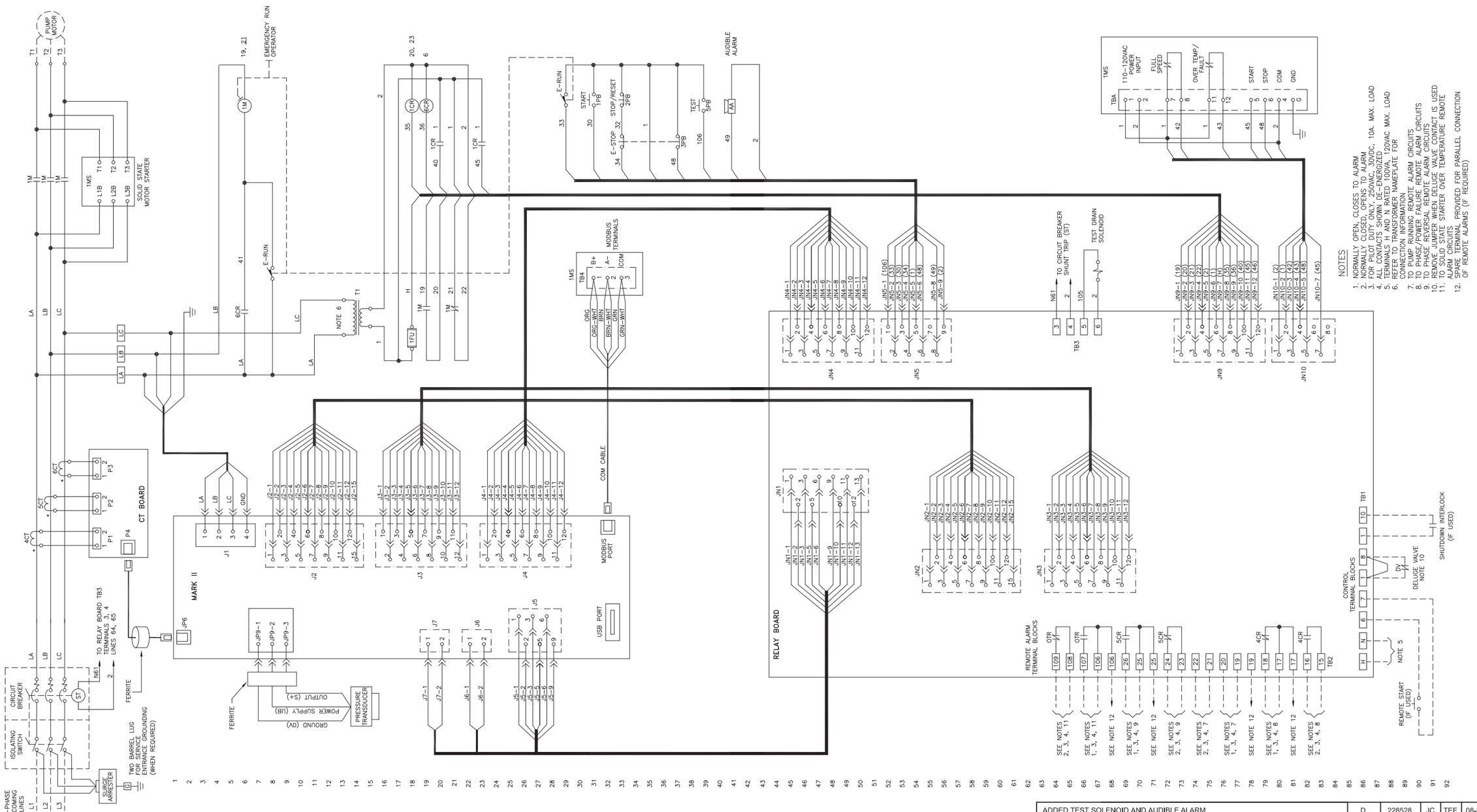

NOTES

1. NORMALLY OPEN, CLOSES TO ALARM
2. NORMALLY CLOSED, OPENS TO ALARM
3. FOR PILOT DUTY ONLY, 250VAC, 30VDC, 10A MAX. LOAD
4. ALL CONTACTS SHOWN DE-ENERGIZED
5. TERMINALS H AND N RATED 100VA, 120VAC MAX. LOAD
6. REFER TO TRANSFORMER NAMEPLATE FOR CONNECTION INFORMATION
7. TO PUMP RUNNING REMOTE ALARM CIRCUITS
8. TO PHASE/POWER FAILURE REMOTE ALARM CIRCUITS
9. TO PHASE REVERSAL REMOTE ALARM CIRCUITS
10. REMOVE JUMPER WHEN DELUGE VALVE CONTACT IS USED
11. TO SOLID STATE STARTER OVER TEMPERATURE REMOTE ALARM CIRCUITS
12. SPARE TERMINAL PROVIDED FOR PARALLEL CONNECTION OF REMOTE ALARMS (IF REQUIRED)

REV	ECN NO	BY	APP	DATE
D	228528	JC	TEF	08-31-10

REVISION DESCRIPTION: ADDED TEST SOLENOID AND AUDIBLE ALARM

SIZE B	BY	DATE	
DRAWN BY	TEF	05-29-08	
FINAL APPROVAL	TEF	05-29-08	

THIRD ANGLE PROJECTION

Firetrol, Inc.

© Firetrol, Inc. Not for construction. Subject to change without notice.

WIRING SCHEMATIC — FTA1900

DIGITAL SOLID STATE REDUCED CURRENT FIRE PUMP CONTROLLER

DRAWING NUMBER WS1930-50

DWG REV E — ECN NO 281239 — SHEET 1 OF 1

All rights reserved. The drawing and the information contained or depicted herein are the sole property of Firetrol, Inc. Copies are communicated to the recipient in strict confidence and may not be retransmitted, published, reproduced, copied or used in any manor, including as the basis for the manufacture or sale of any products, without the express prior written consent of Firetrol, Inc.