Submittal Package

FTA1930/950

MARK[III+] Electric Fire Pump Controller - Solid State Soft Starting With Power Transfer Switch

Project Information

VOLTAGE/POWER TABLE	
LINE VOLTAGE	MOTOR HORSEPOWER
208	NA
220-240	250
APPROX SHIPPING WT: 1150 [522]	

DRAWINGS INCLUDED IN THIS PACKAGE ARE FOR STANDARD CONTROLLERS. ACTUAL "AS BUILT" DRAWINGS MAY DIFFER FROM THOSE SHOWN HERE.

Firetrol, Inc.
3412 Apex Peakway
Apex, North Carolina 27502
P +1 919 460 5200
F +1 919 460 5250
www.firetrol.com

While every precaution has been taken to ensure accuracy and completeness herein, Firetrol, Inc. assumes no responsibility, and disclaims all liability, for damages resulting from use of this information or for any errors or omissions. Specifications and drawings are subject to change without notice. ©2022 Firetrol, Inc., All Rights Reserved.

Publication SBP1930-86-2-240 Rev. G

Firetrol MARK^{III+} Electric Fire Pump Controller

FTA1930/FTA950 - Solid State Reduced Current Starting with Power Transfer Switch

Specifications

1.0 Main Fire Pump Controller

The main fire pump controller shall be a factory assembled, wired and tested unit. The controller shall be of the combined manual and automatic type designed for full voltage starting of the fire pump motor having the horsepower, voltage, phase and frequency rating shown on the plans and drawings. The controller shall be rated for an Ambient Temperature Operating Range of 39ºF (4ºC) to 104ºF (40ºC).

1.1 Standards, Listings & Approvals

The controller shall conform to all the requirements of the latest editions of:
NFPA 20, *Standard for the Installation of Stationary Pumps for Fire Protection*
NFPA 70, *National Electrical Code.*

The controller shall be listed by:
Underwriters Laboratories, Inc., in accordance with UL218, *Standard for Fire Pump Controllers* Canadian Standards Association CSA-C22.2, Standard for Industrial Control Equipment (cUL)
CE - Low Voltage Directive

The controller shall be approved by:
Factory Mutual (IEC 62091)
The City of New York for fire pump service

1.2 Enclosure

The controller components shall be housed in a NEMA Type 2 (IEC IP22) drip-proof, wall mounted enclosure.

1.3 Withstand Ratings (Short Circuit Current Ratings)

All controller components shall be front mounted, wired and front accessible for maintenance. The available short circuit current ratings are shown below. The ratings shall apply to the normal and emergency power components.

Code	200-208V 5-150 HP	220-240V 5-200 HP	380-415V 5-350 HP	440-480 5-400 HP	550-600 5-500 HP
M - Standard	100kA	100kA	100kA	100kA	N/A
N - Intermediate	150kA	150kA	150kA	150kA	N/A
P - High	200kA	200kA	200kA	200kA	N/A
Q - Intermediate	N/A	N/A	N/A	N/A	100kA
R - Standard	N/A	N/A	N/A	N/A	50kA

Code	200-208V 200 HP	220-240V 250-400 HP	380-415V 400-500 HP	440-480 450-500 HP
M - Standard	50A	50kA	50kA	50kA
N - Intermediate	N/A	N/A	N/A	N/A
P - High	100kA	100kA	100kA	100kA
Q - Intermediate	N/A	N/A	N/A	N/A
R - Standard	N/A	N/A	N/A	N/A

1.4 Power Components

The controller shall include a combination isolating disconnect switch/circuit breaker, rated for not less than 115% of the motor full load current, mechanically interlocked and operated with a single, externally mounted handle. The isolating disconnect switch/circuit breaker shall be mechanically interlocked so that the enclosure door cannot be opened with the handle in the ON position except by a hidden tool operated bypass mechanism. The isolating disconnect switch/circuit breaker shall be capable of being

padlocked in the OFF position for installation and maintenance safety, and shall also be capable of being locked in the ON position without affecting the tripping characteristics of the circuit breaker.
The controller will include a voltage surge arrestor and Solid State Reduced Current starting.
The controller shall be equipped with a single handle, manually operated, emergency start mechanism capable of being latched in the ON position.
The controller shall include an Automatic Transfer Switch, electrically or manually operated, mechanically held.

1.5 Operator Interface (HMI)

The operator interface shall be a 7.0" LCD capacitive type color touch screen (HMI technology) powered by an embedded microcomputer with software PLC logic. Included shall be keypad type push-buttons for START, STOP, RUN TEST and TRANSFER SWITCH TEST.
The screen shall include menus for: *Home · Alarms · Configuration · History · Service · Manuals · Language*.

The HMI shall graphically display the following: *Voltage and Amperage of all 3 phases simultaneously using true RMS Technology for both the Normal and Alternate Power Sources · Transfer Switch Status · Motor Stopped/Running · Starting Cause · Actuation Mode · Controller Type · Shutdown Mode · Date & Time · Pump Room Temp. · System Pressure*
System pressure shall be capable of being displayed as: *PSI, kPa, Bar, Feet of Head or Meters of Water.*

The HMI shall allow programming and display of: *Cut In & Cut Out Pressure Settings · Minimum Run Timer · Sequential Start Timer · Periodic Test Timer*

The HMI allows the user to select the language of the system and download the manual or view the manual on screen.

1.6 State and Alarm Indication

Visual indication shall be provided for the following:
Power Available • Motor Run • Periodic Test • Manual Start • Deluge Valve Start • Remote Automatic Start • Remote Manual Start • Emergency Start • Pump On Demand/Automatic Start • Pump Room Temperature • Lockout

The digital display shall visually indicate the following alarms:
Alternate Power Lock Rotor Current • Alternate Power Phase Reversal • Automatic Power Transfer Switch Trouble • Locked Rotor Current • Fail To Start • Under/Over Current • Under/Over Voltage • Phase Unbalance • Check Test Solenoid Valve • Weekly Test Cut-In Not Reached • Transducer Fault • Control Voltage Not Healthy • Motor Trouble • Pump Room Alarm • Invalid Cut-In • Phase Reversal • Power Loss • Phase Loss L1 / L2 / L3 • Low Water Level • Pump On Demand • Low Ambient Temp. • Service Required

Audible and visible alarm shall be provided for:
Fail To Start • Alternate Circuit Breaker Off or Tripped • Alternate Isolating Switch Tripped/Open •

Remote Alarm contacts shall be provided for:
Power Available • Phase Reversal • Motor Run • Common Pump Room Alarm (Overvoltage, Undervoltage, Phase Unbalance, Low/High Pump Room Temperature) • Common Motor Trouble (Overcurrent, Fail To Start, Undercurrent, Ground Fault) • Transfer Switch in Normal Position • Transfer Switch in Alternate Position • Alternate Power Isolating Switch Off

1.7 Pressure and Event Recording

The system shall be capable of logging pressure data and operational events with time/date stamp. The system shall display operational events for the lifetime of the controller and display the pressure data in text or graphical form. The controller shall log the Date/Time of the first start-up and the controller total power on time from that date. The controller shall log first and last statistics for: *First Setup · On Time · Start Count · Last Start Time · Min/Max/Average System Pressure · Min/Max/Average Pump Room Temp. · Jockey Pump On Time/Start Count/Last Start Time · Phase to Phase Voltages with Date Stamp · Amps Per Phase with Date Stamp*

1.8 USB Host Controller

A USB port capable of accepting a USB Flash Memory Disk shall be provided for downloading pressure and event logs.

1.9 Serial Communications

The controller shall feature Modbus with TCP/IP frame format and shielded female RJ45 connector

2.0 Pressure Sensing / Wet Parts

The controller shall be supplied with a solid state pressure transducer with a range of 0-500 psi calibrated for 0-300 psi (0-20.7 bar) and a run test solenoid valve. The wet parts shall be externally mounted and include a protective cover. The pressure sensing line connection to the transducer shall be 1/2-inch FNPT. Provisions for a redundant pressure transducer shall be provided.

2.1 Controller Operation

The controller shall be capable of automatic starting via pressure drop, remote start signal from an automatic device or a deluge valve. The controller can be manually started via the START push-button, the RUN TEST push-button, or a remote signal from a manual device. Stopping can be achieved manually with the STOP push-button or automatically after expiration of minimum run timer or test timer. The minimum run timer (off delay), sequential start timer (on delay) and periodic test timer shall be field adjustable and include a visual countdown on the display. Adjustable timers shall be supplied for Momentary Normal Power Outage Override, Alternate Power Available Delay, Transfer Trouble Delay, Retransfer To Normal, Generator Cooldown.

2.2 Manufacturer

The controller shall be a Firetrol brand.

Firetrol, Inc.
3412 Apex Peakway
Apex, North Carolina 27502
P +1 919 460 5200
F +1 919 460 5250
www.firetrol.com

While every precaution has been taken to ensure accuracy and completeness herein, Firetrol, Inc. assumes no responsibility, and disclaims all liability, for damages resulting from use of this information or for any errors or omissions. Specifications and drawings are subject to change without notice. ©2022 Firetrol, Inc., All Rights Reserved.

Publication SP1930-61 Rev. C

Product Description

FTA1930 with FTA950 (Opt. -TSA)

MARK^{III+} Electric Fire Pump Controllers - Solid State Reduced Current Starting with Power Transfer Switch

Description—Firetrol® FTA1930 Solid State Reduced Current Starting Fire Pump Controllers feature soft start, soft stop and system sensing capabilities that not only provide for reduced current starting, but also offer an improved level of hydro mechanical performance. The controller monitors, displays and records fire pump system information.
Power Transfer Switches are completely assembled with Firetrol Electric Fire Pump Controllers; full or reduced voltage types. The power transfer switches are built for use with generator set or 2nd utility use. The entire package of power transfer switch and controller is completely factory assembled, wired, tested and shipped as a complete unit for easy field connection to the power sources and the fire pump motor.

Approvals – Firetrol fire pump controllers are listed by Underwriters' Laboratories, Inc., in accordance with UL218, *Standard for Fire Pump Controllers*, CSA, *Standard for Industrial Control Equipment*, and approved by Factory Mutual. They are built to meet or exceed the requirements of the approving authorities as well as NEMA and the latest editions of NFPA 20, *Installation of Centrifugal Fire Pumps*, and NFPA 70, *National Electrical Code*.
The power transfer switches are listed by Underwriters' Laboratories, Inc., in accordance with UL218, *Standard for Fire Pump Controllers*; UL1008, *Automatic Transfer Switches*; UL508, *Industrial Control Equipment*, CSA, *Standard for Industrial Control Equipment*; and approved by Factory Mutual. They are built to meet or exceed the requirements of the approving authorities as well as NEMA and the latest editions of NFPA 20, *Installation of Centrifugal Fire Pumps*, and NFPA 70, *National Electrical Code*.

Controller Standard Features — The following are included as standard with each controller:

- Voltage surge protector
- Main Disconnect Switch sized for connected motor horsepower and voltage
- Fire pump Circuit Breaker
- Single Handle Isolating Disconnect Switch/Circuit Breaker mechanism
- Motor contactor
- Single Handle Emergency Manual Run Mechanism to mechanically close motor contactor contacts in an emergency condition
- Built-in Start and Stop push-buttons to bypass automatic start circuits
- Daylight Savings Time Option
- Elapsed Time Meter
- 7.0" LCD capacitive type color touch screen (HMI technology) software upgradeable operator interface powered by an embedded microcomputer with software PLC logic.
- 500 PSI Pressure Transducer (calibrated for 300 PSI (20.7 Bar))and Test Solenoid for fresh water applications, externally mounted with protective cover
- Audible alarm buzzer embedded in the MarkIII+
- Pump Room Ambient Temperature Switch, Display and Alarms

- Pressure and Event Recording with Date Stamp to System Memory Accessible VIA The User Interface and Downloadable to a USB Flash Drive
- Modbus Communications with TCP/IP frame format and a shielded female RJ45 connector
- NEMA Type 2 (IEC IP22) enclosure with bottom entry gland plate and lifting lugs
- Suitable for use as Service Equipment
- The controller supplies visual indication of the following: Power Available • Motor Run • Periodic Test • Manual Start • Deluge Valve Start • Remote Automatic Start • Remote Manual Start • Emergency Start • Pump On Demand (Automatic Start) • Pump Room Temp. • Lockout
- The controller displays visual indication for the following alarm conditions: Control Voltage Not Healthy • Invalid Cut-In • Lock Rotor Current • Loss of Power • Low Ambient Temp. • Low Water Level • Motor Trouble • Phase Reversal • Overcurrent • Overvoltage • Phase Loss L1 / L2 / L3 • Phase Unbalanced • Pressure Transducer Fault Detected • Pump On Demand • Pump Room Alarm • Service Required • Undercurrent • Undervoltage • Check Test Solenoid • Weekly Test Cut-In Reached
- Audible and Visible Indication for Fail To Start.
- DPDT 8A, 250VAC remote alarm contacts are provided for: Power Available • Phase Reversal • Motor Run
  • Common Pump Room Alarm (Overvoltage / Undervoltage / Phase Unbalance / Low Pump Room Temp. / High Pump Room Temp)
  • Common Motor Trouble (Overcurrent / Fail To Start / Undercurrent / Ground Fault)
- Field Adjustable Timers with Visual Countdown for Minimum Run (Off Delay), Sequential Start (On Delay) and Weekly Test

Transfer Switch Standard Features — The following are included as standard with each controller:

- Visual indication of the following: Alternate Power Lock Rotor Current • Alternate Power Phase Reversal • Automatic Transfer Switch Trouble
- Audible and Visible indication of: Alternate Power Circuit Breaker OFF or Tripped • Alternate Power Isolating Switch Tripped/Open
- Transfer Switch test push-button
- Bypass for re-transfer and generator shutdown
- The following adjustable time delays are provided:
  Momentary Normal Power Outage Override • Emergency Power Available Delay • Transfer Trouble Delay • Retransfer to Normal • Generator Cooldown
- Remote Alarm Contacts For: Emergency Isolating Switch Off • Transfer Switch in Normal Position • Transfer Switch in Emergency Position

FOR MODEL # INFORMATION SEE PUBLICATION SD1000-61
FOR OPTIONS AND MODIFICATIONS SEE PUBLICATION OP1000-72

Firetrol, Inc.
3412 Apex Peakway
Apex, North Carolina 27502
P +1 919 460 5200
F +1 919 460 5250
www.firetrol.com
While every precaution has been taken to ensure accuracy and completeness herein, Firetrol, Inc. assumes no responsibility, and disclaims all liability, for damages resulting from use of this information or for any errors or omissions. Specifications and drawings are subject to change without notice. ©2022 Firetrol, Inc., All Rights Reserved.
Publication PD1930-61 Rev. D

General Starting Configuration

FTA1930

MARK[III] Electric Fire Pump Controllers - Solid State Reduced Current Starting

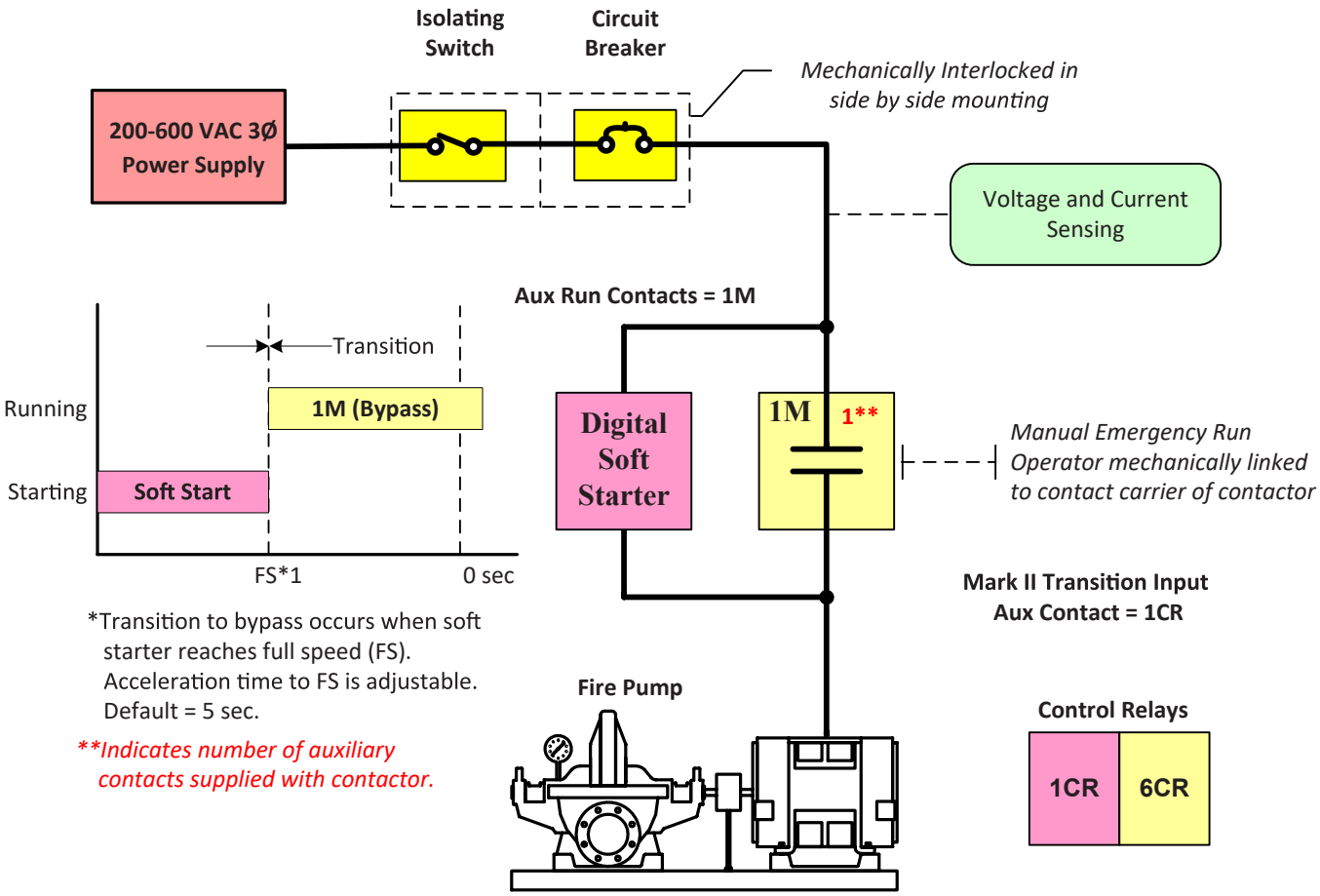

*Transition to bypass occurs when soft starter reaches full speed (FS). Acceleration time to FS is adjustable. Default = 5 sec.

***Indicates number of auxiliary contacts supplied with contactor.*

Firetrol, Inc.
3412 Apex Peakway
Apex, North Carolina 27502
P +1 919 460 5200
F +1 919 460 5250
www.firetrol.com

While every precaution has been taken to ensure accuracy and completeness herein, Firetrol, Inc. assumes no responsibility, and disclaims all liability, for damages resulting from use of this information or for any errors or omissions. Specifications and drawings are subject to change without notice. ©2019 Firetrol, Inc., All Rights Reserved.

Publication GS1930-10(A)

Model Number Selection Guide

FTA1000 - FTA1930 with FTA950 (Opt. -TSA)

MARK[III] Electric Fire Pump Controllers with Power Transfer Switch

FTA1000, 1250, 1300, 1350, 1800, 1930
ELECTRIC FIRE PUMP CONTROLLERS
Example: FTA1300-AM75HH-TSA-xx

Starting Method
- ☐ 1000 - Across-the-line (direct on line)
- ◯ 1250 - Part Winding (50%-50% windings)
- ◯ 1300 - Wye-delta (star-delta), open transition
- ◯ 1350 - Wye-delta (star-delta), closed transition
- ◯ 1800 - Autotransformer
- ◉ 1930 - Digital Solid-state soft start/stop

Start/Stop Options
- ■ A - Automatic/Manual start with manual stop only (default). Field configurable to automatic start with timed permissive stop after minimum run time and manual start with manual stop only.
- ◯ C - For Manual only operation of Foam Controllers (use option -LK3)

Modifications
See Publication OP1000-72

Automatic Transfer Switch

Three Phase Voltage
- ☐ A - 220-240 Volt, 60 Hertz (230 V)
- ◯ AZ - 220-230 Volt, 50 Hertz
- ◯ B - 440-480 Volt, 60 Hertz (460 V)
- ◯ BZ - 415 Volt, 50 Hertz
- ◯ C - 550-600 Volt, 60 Hertz (575 V)
- ◯ F - 380 Volt, 60 Hertz
- ◯ FZ - 380 Volt, 50 Hertz
- ◯ FF - 400 Volt, 60 Hertz
- ◯ FX - 400 Volt, 50 Hertz
- ◯ H - 208 Volt, 60 Hertz
- ◯ HH - 200 Volt, 60 Hertz

Code	200-208V 5-150 HP	220-240V 5-200 HP	380-415V 5-350 HP	440-480V 5-400 HP	550-600V 5-500 HP
■ M - Standard	100kA	100kA	100kA	100kA	N/A
◯ N - Intermediate	150kA	150kA	150kA	150kA	N/A
◯ P - High	200kA	200kA	200kA	200kA	N/A
◯ Q - Intermediate	N/A	N/A	N/A	N/A	100kA
◯ R - Standard	N/A	N/A	N/A	N/A	50kA

Code	200-208V 200 HP	220-240V 250-400 HP	380-415V 400-500 HP	440-480V 450-500 HP
◯ M - Standard	50A	50kA	50kA	50kA
◯ N - Intermediate	N/A	N/A	N/A	N/A
◯ P - High	100kA	100kA	100kA	100kA
◯ Q - Intermediate	N/A	N/A	N/A	N/A
◯ R - Standard	N/A	N/A	N/A	N/A

For controller options and modifications see Publication OP10000-72.

Horsepower Rating
- ☐ 03 - 3 HP
- ◯ 05 - 5 HP
- ◯ 07 - 7 1/2 HP
- ◯ 10 - 10 HP
- ◯ 15 - 15 HP
- ◯ 20 - 20 HP
- ◯ 25 - 25 HP
- ◯ 30 - 30 HP
- ◯ 40 - 40 HP
- ◯ 50 - 50 HP
- ◯ 60 - 60 HP
- ◯ 75 - 75 HP
- ◯ 100 - 100 HP
- ◯ 125 - 125 HP
- ◯ 150 - 150 HP
- ◯ 200 - 200 HP
- ◯ 250 - 250 HP
- ◯ 300 - 300 HP
- ◯ 350 - 350 HP
- ◯ 400 - 400 HP
- ◯ 450 - 450 HP
- ◯ 500 - 500 HP

Firetrol, Inc.
3412 Apex Peakway
Apex, North Carolina 27502
P +1 919 460 5200
F +1 919 460 5250
www.firetrol.com

While every precaution has been taken to ensure accuracy and completeness herein, Firetrol, Inc. assumes no responsibility, and disclaims all liability, for damages resulting from use of this information or for any errors or omissions. Specifications and drawings are subject to change without notice. ©2019 Firetrol, Inc., All Rights Reserved.

Publication SD1000-61 Rev. B

Options & Modifications

FTA1000 - FTA1930
With Opt. -TSA (FTA950)

MARK^{III+} Electric Fire Pump Controllers

SPECIAL ENCLOSURES

Option	Description
☐ ---	Enclosure, NEMA Type 2 (IEC IP22), Painted Steel (Standard)
○ -E	Enclosure, NEMA Type 4 (IEC IP65), Painted Steel
○ -F	Enclosure, NEMA Type 4X (IEC IP66), #304 Stainless Steel, Brushed Finish
○ -FD	Enclosure, NEMA Type 4X (IEC IP66), #316 Stainless Steel, Brushed Finish
○ -FDB	Enclosure, NEMA Type 4X (IEC IP66), #316 Stainless Steel, Seam Welded, Brushed Finish
○ -FDP	Enclosure, NEMA Type 4X (IEC IP66), #316 Stainless Steel, Painted Finish
○ -FXP	Enclosure, NEMA Type 4X (IEC IP66), #304 Stainless Steel, Painted Finish
○ -G	Enclosure, NEMA Type 12 (IEC IP54), Painted Steel
○ -T	Enclosure, NEMA Type 3R (IEC IP24), Painted Steel
○ -U	Enclosure, NEMA Type 3 (IEC IP54), Painted Steel

CIRCUIT BREAKER OPTION

Option	Description								
Standard Short Circuit Current Rating									
☐ -M ○ -R	200-208V 5-150 HP 100kA (M)	220-240V 5-200 HP 100kA (M)	380-415V 5-350 HP 100kA (M)	440-480V 5-400 HP 100kA (M)	550-600V 5-500 HP 50kA (R)	200-208V 200 HP 50kA (M)	220-240V 250-400 HP 50kA (M)	380-415V 400-500 HP 50kA (M)	440-480V 450-500 HP 50kA (M)
Intermediate Short Circuit Current Rating									
○ -N ○ -Q	200-208V 5-150 HP 150kA (N)	220-240V 5-200 HP 150kA (N)	380-415V 5-350 HP 150kA (N)	440-480V 5-400 HP 150kA (N)	550-600V 5-500 HP 100kA (Q)	200-208V 200 HP N/A	220-240V 250-400 HP N/A	380-415V 400-500 HP N/A	440-480V 450-500 HP N/A
High Short Circuit Current Rating									
○ -P	200-208V 5-150 HP 200kA	220-240V 5-200 HP 200kA	380-415V 5-350 HP 200kA	440-480V 5-400 HP 200kA	550-600V 5-500 HP NA	200-208V 200 HP 100kA	220-240V 250-400 HP 100kA	380-415V 400-500 HP 100kA	440-480V 450-500 HP 100kA

ANTI-CONDENSATION SPACE HEATERS

Option	Description
☐ None	
○ -J	Space Heater, 120V Externally Powered with Circuit Breaker & Thermostat
○ -K	Space Heater, 120V Externally Powered with Circuit Breaker & Humidistat
○ -M	Space Heater, 240V Externally Powered with Circuit Breaker & Thermostat
○ -N	Space Heater, 240V Externally Powered with Circuit Breaker & Humidistat
○ -JKP	Space Heater, 120V Externally Powered with Circuit Breaker, Thermostat and Humidistat in Parallel
○ -MNP	Space Heater, 240V Externally Powered with Circuit Breaker, Thermostat and Humidistat in Parallel

PRESSURE TRANSDUCERS, SOLENOID VALVES, PLUMBING

Option	Description
☐ ---	Wetted Parts including Pressure Sensor and Test Solenoid, 300 PSI (20.4 Bar) Fresh Water
○ -B1	Wetted Parts including Pressure Sensor and Test Solenoid, 500 PSI (34.5 Bar) Fresh Water (For Factory Calibration Purposes Only)
○ -C1	Wetted Parts including Pressure Sensor and Test Solenoid, 300 PSI (20.4 Bar), Sea Water
○ -D1	Wetted Parts including Pressure Sensor and Test Solenoid, 500 PSI (34.5 Bar), Sea Water
☐ -SP1	Low Suction Pressure Transducer, Fresh Water, 0-300 PSI (20.4 Bar) with Visible Indication and Output Contacts
○ -SP2	Low Suction Pressure Transducer, Sea Water, 0-300 PSI (20.4 Bar) with Visible Indication and Output Contact

FOAM PUMP APPLICATIONS

Option	Description
Required For Foam	
☐ -LR1	Low Foam Level External Input, Visible Indications and Alarm Contacts, Additive with Provisions for Proof Pressure Switch Connection, With Lockout and Remote Alarm Indication For Interlock On (Locked Out)
Required For Foam	
■ -LK1	Foam Pump Application With Pressure Transducer and Run Test Solenoid Valve (Auto. Start)
○ -LK2	Foam Pump Application With Pressure Transducer and Run Test Solenoid Valve, Stainless Steel (Auto. Start)
○ -LK3	Foam Pump Application Without Pressure Transducer and Run Test Solenoid Valve (Manual Start)
Optional For Foam	
☐ -DVC	Operation, Dump Valve Control

ALARMS

Option	Description
☐ -AC	Extra Alarm Output Contacts, Pump Operating (2 Form-C)
☐ -AM	Alarm Output Contacts, Fail to Start
☐ -AV	Alarm Output Contacts, Low Pump Room Temperature
☐ -AW	Alarm Output Contacts, Reservoir Low
☐ -AY1	Configurable Low Suction Pressure, Visible/Output Contacts with External Digital Input
☐ -BW1	Extra Alarm Output Contacts, Phase Failure/Phase Reversal
☐ -BY1	Alarm Output Contacts, Overcurrent
☐ -CTS1	Configurable Low Suction Pressure, Visible/Output Contacts with Suction Pressure Transducer
☐ -EH1	Alarm Output Contacts, Main Relief Valve Open
☐ -EK	Alarm Output Contacts, Flow Meter Open
☐ -JR	Visible Indicator, Jockey Pump Operating
☐ -JT	Alarm, Audible/Visible, Jockey Pump Trouble
☐ -KH	Alarm Output Contacts, Common Alarm
☐ -P1	Alarm, Audible/Visible, Built-In 120V Supervisory System (Includes Visible Supervisory Voltage Normal Indication and Audible Pump Operating, Phase Failure and Phase Reversal Indication
☐ -PE	Alarm Output Contacts, Low System Pressure (Pump on Demand)
☐ -PT	Alarm, Audible/Visible, Built-In 240V Supervisory System (Includes Visible Supervisory Voltage Normal Indication and Audible Pump Operating, Phase Failure and Phase Reversal Indication

MISCELLANEOUS

Option	Description
☐ -ED2	Normal Source Load Shedding with Adjustable Time Delay to Remove Non-Critical Loads Before Starting
☐ -EL	Series Pumping Operation, High Zone Controller
☐ -EM	Series Pumping Operation, Mid Zone Controller
☐ -EN	Series Pumping Operation, Low Zone Controller
☐ -IEC	Marking, CE with External Wet Parts (Requires NEMA Type 12 (IP54) Enclosure as Minimum)
☐ -MZN	Neutral Lug, Service Entrance, Non-Insulated Bonded to Enclosure
☐ -OSP	Seismic Certification compliant to OSHPD (CA) for rigid base or wall mount only
☐ -PK	Terminal Blocks, Extra Remote Start
☐ -PY	Output Contacts, Motor Space Heater, Externally Powered
☐ -S	Tropicalization
☐ -SEI	Seismic Certification compliant to CBC 2019, IBC 2018 for rigid base or wall mount only
☐ -USBX	Data Port, External USB
☐ -ZPM1	Data Port, RS-485 Modbus RTU
☐ -Y55	Controller Temperature Rating, 55°C (131°F) Ambient Temperature
☐ -XCR	Export Packaging (Wooden Crating to Conform to IPPC Standards)

TRANSFER SWITCH ONLY OPTIONS

Option	Description
☐ -EC	Extra Contacts for Remote Indication, Transfer Switch Position
☐ -ED1	Alternate Source Load Shedding with Adjustable Time Delay to Remove Non-Critical Loads Before Starting

Firetrol, Inc.
3412 Apex Peakway
Apex, North Carolina 27502
P +1 919 460 5200
F +1 919 460 5250
www.firetrol.com

While every precaution has been taken to ensure accuracy and completeness herein, Firetrol, Inc. assumes no responsibility, and disclaims all liability, for damages resulting from use of this information or for any errors or omissions. Specifications and drawings are subject to change without notice. ©2022 Firetrol, Inc., All Rights Reserved.

Publication OP1000-72 Rev. H

Dimensions and Shipping Weight

FTA1930/950

MARK^{III+} Electric Fire Pump Controllers - Solid State Reduced Current Starting With Power Transfer Switch

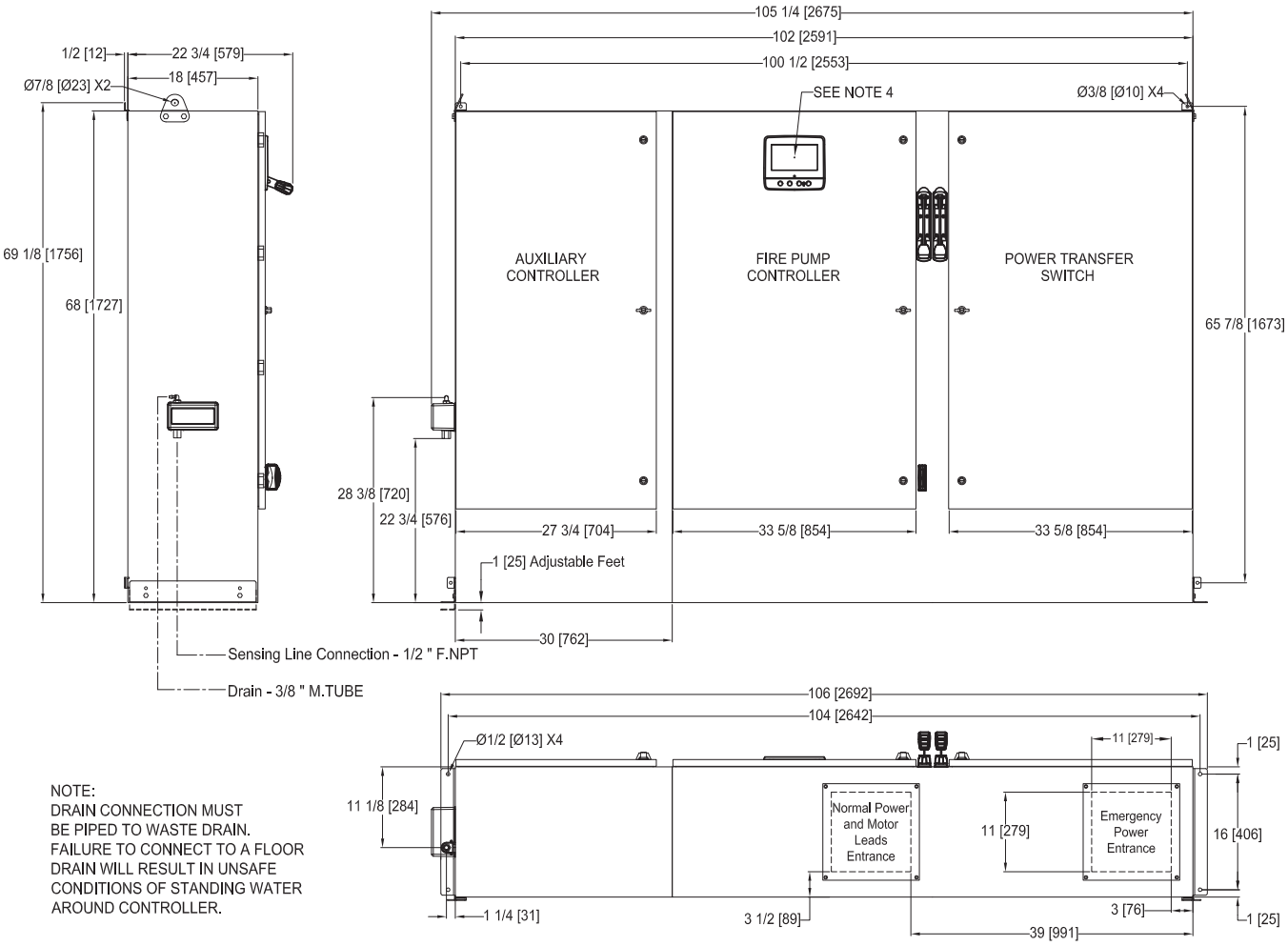

NOTE:
DRAIN CONNECTION MUST BE PIPED TO WASTE DRAIN. FAILURE TO CONNECT TO A FLOOR DRAIN WILL RESULT IN UNSAFE CONDITIONS OF STANDING WATER AROUND CONTROLLER.

VOLTAGE/POWER TABLE	
LINE VOLTAGE	MOTOR HORSEPOWER
208	200
220-240	250
380-400-415	400-450
440-480	500
600	NA
APPROX SHIPPING WT: 1500 [680]	

NOTES:
1. STANDARD: NEMA 2
2. STANDARD PAINT: TEXTURED RED RAL3002
3. ALL DIMENSIONS IN INCHES [MILLIMETERS] SHIPPING WEIGHT IN POUNDS [KG]
4. CENTER OF MARK III + SCREEN: 61 5/8 [1564] FROM BOTTOM OF ENCLOSURE
5. BOTTOM CONDUIT ENTRANCE THROUGH REMOVABLE GLAND PLATE RECOMMENDED
6. USE WATERTIGHT CONDUIT AND CONNECTOR ONLY
7. PROTECT EQUIPMENT AGAINST DRILLING CHIPS
8. DOOR SWING EQUAL TO DOOR WIDTH
9. DRAWINGS FOR CONSTRUCTION PURPOSES MUST BE OBTAINED FROM FIRETROL OR THE LOCAL FIRETROL REPRESENTATIVE
10. SEISMIC MOUNTING TO BE RIGID WALL AND BASE ONLY

REVISION DESCRIPTION	REV	ECN NO	BY	APP	DATE
REMOVED BELL AND UPDATED THE MARKIII TO MARKIII PLUS	A	-	CIR	CIR	10-27-21

THIRD ANGLE PROJECTION	SIZE A	BY	DATE
	DRAWN BY	CIR	11-5-19
	FINAL APPROVAL	CIR	11-5-19

Firetrol, Inc.

© Firetrol, Inc. Not for construction. Subject to change without notice.

DIMENSIONS & SHIPPING WEIGHT — FTA1930 WITH FTA950

DIGITAL SOLID STATE REDUCED CURRENT FIRE PUMP CONTROLLER AND POWER TRANSFER SWITCH

DRAWING NUMBER DD1930-86 CDL

DWG REV A — ECN NO -

SHEET 1 OF 1

All rights reserved. The drawing and the information contained or depicted herein are the sole property of Firetrol, Inc. Copies are communicated to the recipient in strict confidence and may not be retransmitted, published, reproduced, copied or used in any manner, including as the basis for the manufacture or sale of any products, without the express prior written consent of Firetrol, Inc.

MARK III+ Electric Fire Pump Controllers - Solid State Reduced Current Starting With Power Transfer Switch

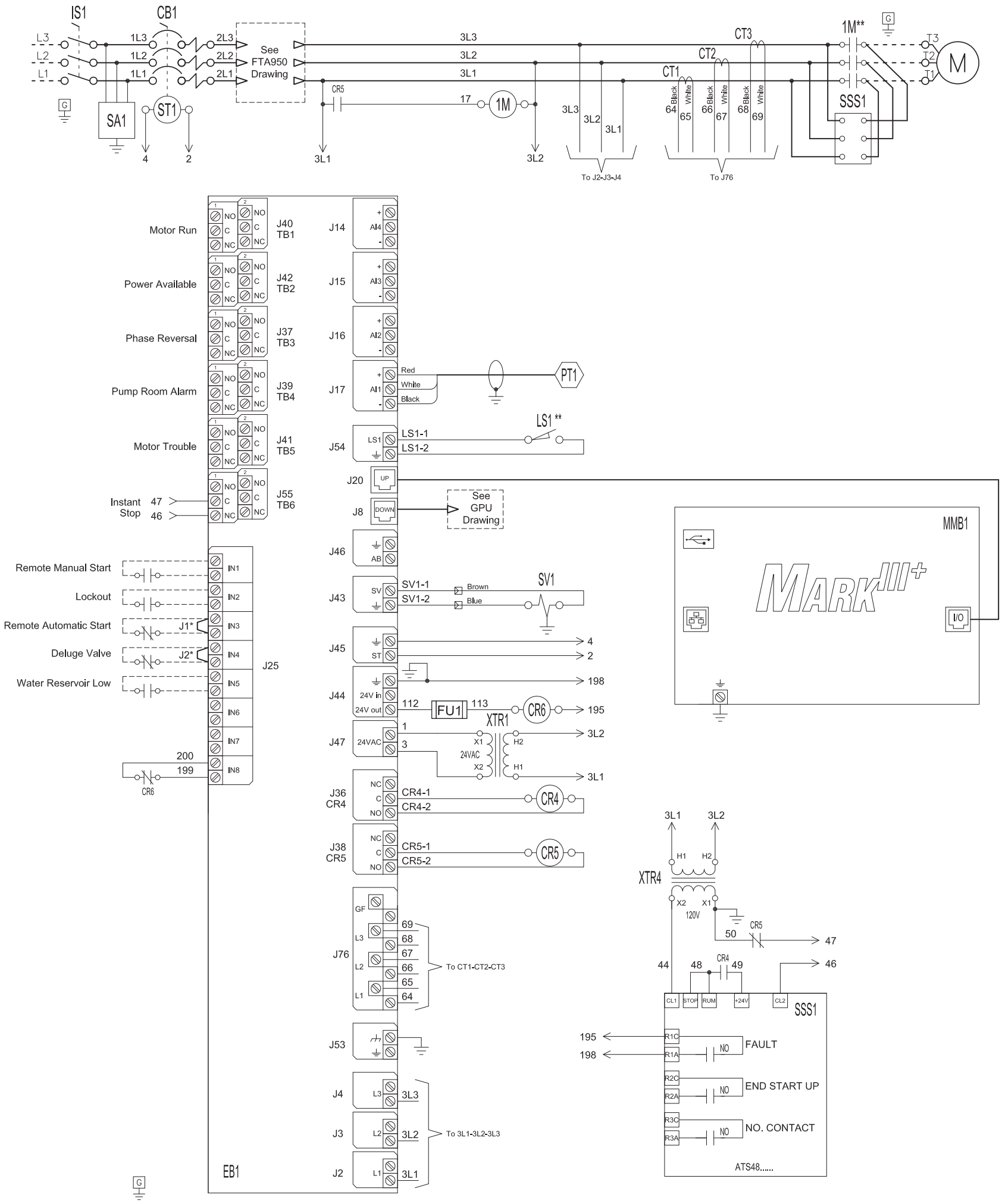

* Remove jumper to use this feature
** Contact closes when emergency start is in "ON" position

Legend	
1M	Contactor
CB	Circuit Breaker
CR	Control Relay
CT	Current Transformer
EB	Electric I/O Board
IS	Isolating Switch
J	Jumper
LS	Limit Switch
PT	Pressure Transducer
SA	Surge Arrester
SSS	Soft Starter
ST	Shunt Trip
SV	Solenoid Valve
MMB	Mark III Main Board
XTR	Transformer

VOLTAGE/POWER TABLE	
LINE VOLTAGE	MOTOR HORSEPOWER
208	N/A
220-240	250-400
380-400-415	450-500
440-480	500
600	N/A

Drawing for information only.
Manufacturer reserves the right to modify this drawing without notice.
Contact manufacturer for "As Built" drawing.

REVISION DESCRIPTION	REV	ECN NO	BY	APP	DATE
UPDATED TO MARK III+	B	-	TEF	TEF	10/27/21
REVISED TO AGREE W/CURRENT MFG	A	-	CIR	CIR	2-10-21

THIRD ANGLE PROJECTION	SIZE B	BY	DATE
	DRAWN BY	JMW	12-2-19
	FINAL APPROVAL	CIR	12-2-19

Firetrol, Inc.

© Firetrol, Inc. Not for construction.
Subject to change without notice.

WIRING SCHEMATIC — FTA1930 W/FTA950

DIGITAL SOLID STATE REDUCED CURRENT FIRE PUMP CONTROLLER WITH POWER TRANSFER SWITCH

DRAWING NUMBER WS1930-82 CDL

DWG REV B — ECN NO -

SHEET 1 OF 1

All rights reserved. The drawing and the information contained or depicted herein are the sole property of Firetrol, Inc. Copies are communicated to the recipient in strict confidence and may not be retransmitted, published, reproduced, copied or used in any manner, including as the basis for the manufacture or sale of any products, without the express prior written consent of Firetrol, Inc.

Wiring Schematic
200-240V

Firetrol

FTA950

Power Transfer Switch For Use With MARK^{III+} Electric Fire Pump Controllers

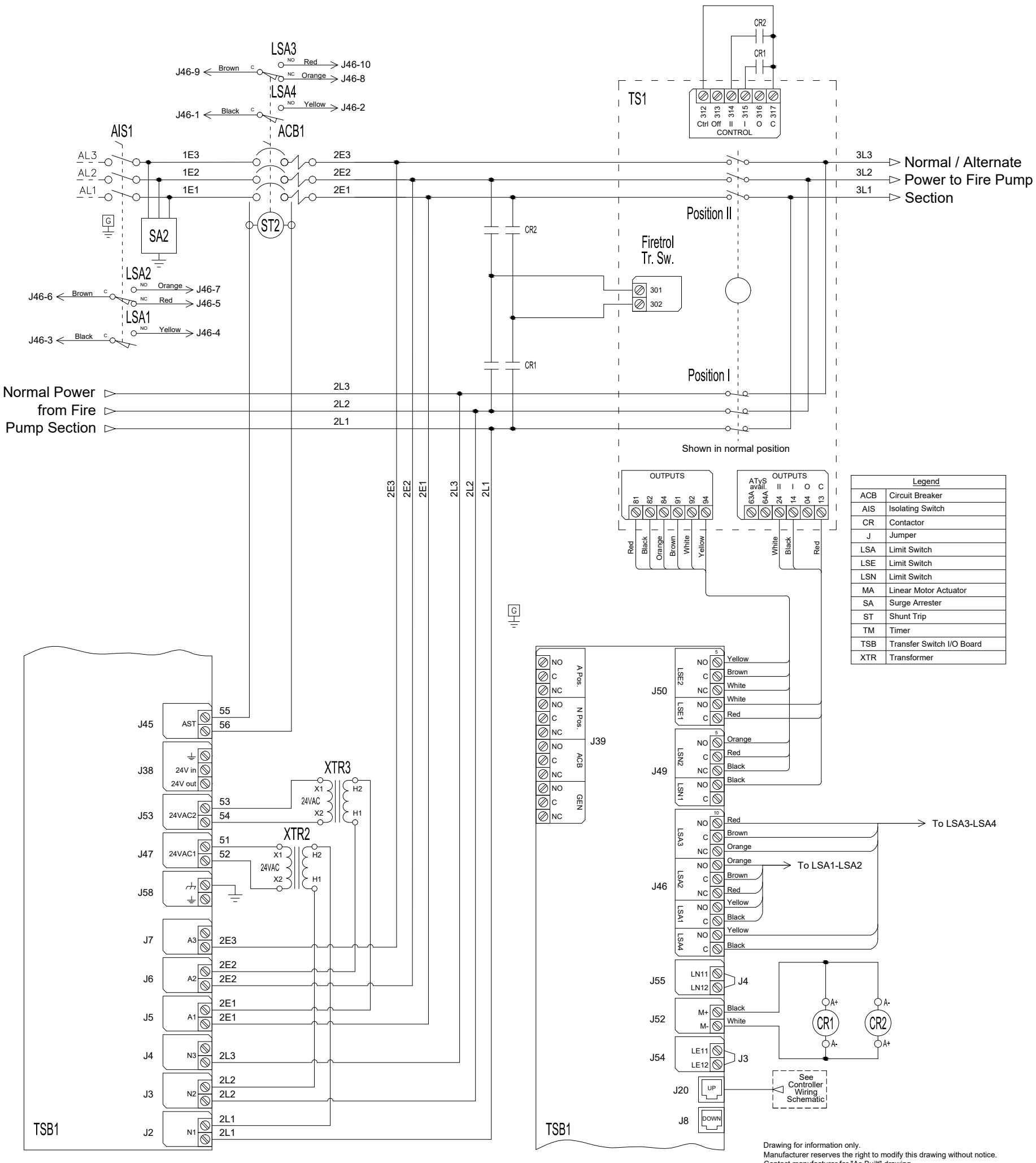

Legend	
ACB	Circuit Breaker
AIS	Isolating Switch
CR	Contactor
J	Jumper
LSA	Limit Switch
LSE	Limit Switch
LSN	Limit Switch
MA	Linear Motor Actuator
SA	Surge Arrester
ST	Shunt Trip
TM	Timer
TSB	Transfer Switch I/O Board
XTR	Transformer

Drawing for information only.
Manufacturer reserves the right to modify this drawing without notice.
Contact manufacturer for "As Built" drawing.

VOLTAGE/POWER TABLE	
LINE VOLTAGE	MOTOR HORSEPOWER
200-208	125-250
220-240	150-300

THIRD ANGLE PROJECTION	SIZE B	BY	DATE	Firetrol, Inc.	REVISION DESCRIPTION		REV	ECN NO	BY	APP	DATE
	DRAWN BY	CIR	12-9-19	© Firetrol, Inc. Not for construction. Subject to change without notice.	WIRING SCHEMATIC	FTA950	DRAWING NUMBER WS950-63 CDL				
	FINAL APPROVAL	CIR	12-9-19		FIRE PUMP TRANSFER SWITCH FOR GEN SET AND SECOND UTILITY POWER SOURCE FOR 200-240V		DWG REV -	ECN NO -		SHEET 1 OF 1	

All rights reserved. The drawing and the information contained or depicted herein are the sole property of Firetrol, Inc. Copies are communicated to the recipient in strict confidence and may not be retransmitted, published, reproduced, copied or used in any manor, including as the basis for the manufacture or sale of any products, without the express prior written consent of Firetrol, Inc.

Field Connections
Alarm & Control Terminals

Firetrol

FTA1930

MARK[III] Electric Fire Pump Controllers - Solid State Reduced Current Starting

Control Terminals (EB1)

Terminals Wire Size:
24 - 12 AWG
0.5 Nm

Remote Manual Start	Close to start pump	IN1	J25
Lockout	Close to block start	IN2	J25
Remote Automatic Start	Open to start pump	J1* IN3	J25
Deluge Valve	Open to start pump	J2* IN4	J25

Alarm Inputs (EB1)

Terminals Wire Size:
24 - 12 AWG
0.5 Nm

Water Reservoir Low	Close to signal alarm	IN5	J25

Remote Alarm Terminals (EB1)

Terminals Wire Size:
24 - 12 AWG
0.5 Nm

Motor Run	Normally open, Closes to alarm; Normally closed, Opens to alarm	Normally open, Closes to alarm; Normally closed, Opens to alarm	J40 TB1
Power Available	Normally open, Closes to alarm; Normally closed, Opens to alarm	Normally open, Closes to alarm; Normally closed, Opens to alarm	J42 TB2
Phase Reversal	Normally open, Closes to alarm; Normally closed, Opens to alarm	Normally open, Closes to alarm; Normally closed, Opens to alarm	J37 TB3
Pump Room Alarm **	Normally open, Closes to alarm; Normally closed, Opens to alarm	Normally open, Closes to alarm; Normally closed, Opens to alarm	J39 TB4
Motor Trouble **	Normally open, Closes to alarm; Normally closed, Opens to alarm	Normally open, Closes to alarm; Normally closed, Opens to alarm	J41 TB5
(Field Programmable ***)	Normally open, Closes to alarm; Normally closed, Opens to alarm	Normally open, Closes to alarm; Normally closed, Opens to alarm	J55 TB6

Network Connection (VMB1)

Shielded Female Connector RJ45

Modbus TCP/IP — I/O

* Remove jumper to use this feature
** Re-assignable
*** Not available on FTA1930 models

Drawing for information only.
Manufacturer reserves the right to modify this drawing without notice.
Contact manufacturer for "As Built" drawing.

RELEASED	-	-	CIR	CIR	11-11-19
REVISION DESCRIPTION	REV	ECN NO	BY	APP	DATE

THIRD ANGLE PROJECTION	SIZE A	BY	DATE
	DRAWN BY	CIR	11-10-19
	FINAL APPROVAL	CIR	11-10-19

Firetrol, Inc.

© Firetrol, Inc. Not for construction. Subject to change without notice.

FIELD CONNECTIONS — FTA1930

DIGITAL SOLID STATE REDUCED CURRENT FIRE PUMP CONTROLLER

DRAWING NUMBER FC1930-60 CDL

DWG REV - ECN NO - SHEET 1 OF 1

All rights reserved. The drawing and the information contained or depicted herein are the sole property of Firetrol, Inc. Copies are communicated to the recipient in strict confidence and may not be retransmitted, published, reproduced, copied or used in any manor, including as the basis for the manufacture or sale of any products, without the express prior written consent of Firetrol, Inc.

Field Connections
Line & Motor Wire Terminal Capacity

FTA1930

MARK[III] Electric Fire Pump Controllers – Solid State Reduced Current Starting

Line Terminals

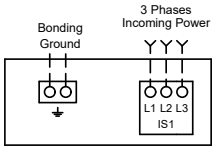

Notes:
1 - For proper wire sizing, refer to NFPA70 and NEC (USA) or CEC (Canada) or local code.
2 - Controller suitable for service entrance in USA.
3 - For more accurate motor connections refer to motor manufacturer or motor nameplate.
4 - Controller is phase sensitive. Incoming lines must be connected in ABC sequence.

COPPER CONDUCTORS for Isolating Switch (IS1).
Field Wiring According to Bending Space (AWG or MCM). Terminals L1 - L2 - L3

Bending Space	5 " (127 mm)							8 " (203 mm)		
HP / Voltage	5	7.5	10	15	20	25	30	40	50	60
208	1x (10 to 1/0)	1x (8 to 1/0)	1x (8 to 1/0)	1x (6 to 1/0)	1x (4 to 1/0)	1x (3 to 1/0)	1x (2 to 1/0)	1x (1/0 to 3/0)	1x (3/0 to 250)	1x (4/0 to 250)
220 to 240	1x (10 to 1/0)	1x (10 to 1/0)	1x (8 to 1/0)	1x (6 to 1/0)	1x (4 to 1/0)	1x (4 to 1/0)	1x (3 to 1/0)	1x (1 to 3/0)	1x (2/0 to 3/0)	1x (3/0 to 250)
380 to 416	1x (10 to 1/0)	1x (10 to 1/0)	1x (10 to 1/0)	1x (8 to 1/0)	1x (8 to 1/0)	1x (6 to 1/0)	1x (6 to 1/0)	1x (4 to 1/0)	1x (3 to 1/0)	1x (3 to 1/0)
440 to 480	1x (10 to 1/0)	1x (10 to 1/0)	1x (10 to 1/0)	1x (10 to 1/0)	1x (8 to 1/0)	1x (8 to 1/0)	1x (6 to 1/0)	1x (6 to 1/0)	1x (4 to 1/0)	1x (3 to 1/0)
600	1x (10 to 1/0)	1x (10 to 1/0)	1x (10 to 1/0)	1x (10 to 1/0)	1x (10 to 1/0)	1x (8 to 1/0)	1x (8 to 1/0)	1x (6 to 1/0)	1x (6 to 1/0)	1x (4 to 1/0)

Bending Space	12 " (305 mm)				16 " (406 mm)						
HP / Voltage	75	100	125	150	200	250	300	350	400	450	500
208	2x (1/0 to 500)	2x (2/0 to 500)	2x (4/0 to 500)	2x (250 to 500)	3x (4/0 to 500)	--------	--------	--------	--------	--------	--------
220 to 240	1x (250)	2x (2/0 to 500)	2x (3/0 to 500)	2x (4/0 to 500)	2x (350 to 500)	3x (250 to 500)	--------	--------	--------	--------	--------
380 to 416	1x (1/0 to 3/0)	1x (3/0 to 250)	1x (250)	2x (1/0 to 500)	2x (3/0 to 500)	2x (4/0 to 500)	2x (300 to 500)	2x (400 to 500)	3x (250 to 500)	3x (300 to 500)	--------
440 to 480	1x (1 to 3/0)	1x (2/0 to 3/0)	1x (3/0 to 250)	1x (4/0 to 250)	2x (1/0 to 500)	2x (3/0 to 500)	2x (4/0 to 500)	2x (300 to 500)	2x (350 to 500)	2x (400 to 500)	3x (250 to 500)
600	1x (3 to 1/0)	1x (1 to 3/0)	1x (2/0 to 3/0)	1x (3/0 to 250)	1x (250)	2x (2/0 to 500)	2x (3/0 to 500)	2x (4/0 to 500)	2x (250 to 500)	2x (300 to 500)	2x (350 to 500)
Bending Space	**5 " (127 mm)**	**8 " (203 mm)**				**12 " (305 mm)**					

Motor Terminals

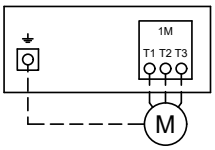

COPPER CONDUCTORS for Motor Connection (1M).
Field Wiring According to Bending Space (AWG or MCM). Terminals T1 - T2 - T3

HP / Voltage	5	7.5	10	15	20	25	30	40	50	60
208	1x (10 to 2)	1x (8 to 2)	1x (8 to 2)	1x (6 to 2)	1x (4 to 2)	1x (3 to 2/0)	1x (2 to 2/0)	1x (1/0 to 3/0)	1x (3/0)	1x (4/0 to 300)
220 to 240	1x (10 to 2)	1x (10 to 2)	1x (8 to 2)	1x (6 to 2)	1x (4 to 2)	1x (4 to 2/0)	1x (3 to 2/0)	1x (1/0 to 3/0)	1x (2/0 to 3/0)	1x (3/0)
380 to 416	1x (10 to 2)	1x (10 to 2)	1x (10 to 2)	1x (8 to 2)	1x (8 to 2)	1x (6 to 2)	1x (6 to 1/0)	1x (4 to 2)	1x (3 to 2/0)	1x (1 to 2/0)
440 to 480	1x (10 to 2)	1x (10 to 2)	1x (10 to 2)	1x (10 to 2)	1x (8 to 2)	1x (8 to 2)	1x (6 to 2)	1x (6 to 2)	1x (4 to 2/0)	1x (3 to 2/0)
600	1x (10 to 2)	1x (10 to 2)	1x (10 to 2)	1x (10 to 2)	1x (10 to 2)	1x (8 to 2)	1x (8 to 2)	1x (6 to 2)	1x (6 to 2)	1x (4 to 2/0)

HP / Voltage	75	100	125	150	200	250	300	350	400	450	500
208	1x (300)	2x (2/0 to 300)	2x (4/0 to 300)	2x (250 to 300)	2x (400 to 600)	--------	--------	--------	--------	--------	--------
220 to 240	1x (250 to 300)	2x (2/0 to 300)	2x (3/0 to 300)	2x (4/0 to 300)	2x (350 to 500)	2x (500 to 600)	--------	--------	--------	--------	--------
380 to 416	1x (1/0 to 3/0)	1x (3/0)	1x (250 to 300)	1x (300)	2x (3/0 to 300)	2x (4/0 to 300)	2x (300)	2x (400 to 500)	2x (500 to 600)	2x (600)	
440 to 480	1x (1 to 1/0)	1x (2/0 to 3/0)	1x (3/0)	1x (4/0 to 300)	2x (1/0 to 300)	2x (3/0 to 300)	2x (4/0 to 300)	2x (300)	2x (350 to 500)	2x (400 to 600)	2x (500 to 600)
600	1x (3 to 1/0)	1x (1 to 1/0)	1x (2/0 to 3/0)	1x (3/0)	1x (250 to 300)	2x (2/0 to 300)	2x (3/0 to 300)	2x (4/0 to 300)	2x (250 to 300)	2x (300)	2x (350 to 500)

REVISED TO AGREE W/CURRENT MFG	A	-	CIR	CIR	2-10-21
REVISION DESCRIPTION	REV	ECN NO	BY	APP	DATE

SIZE A	BY	DATE
DRAWN BY	CIR	11-10-19
FINAL APPROVAL	CIR	11-10-19

THIRD ANGLE PROJECTION

Firetrol, Inc.

© Firetrol, Inc. Not for construction. Subject to change without notice.

FIELD CONNECTIONS | FTA1930

DIGITAL SOLID STATE REDUCED CURRENT FIRE PUMP CONTROLLER
LINE AND MOTOR FIELD WIRE TERMINAL CAPACITY

DRAWING NUMBER FC1930-61 CDL

DWG REV A | ECN NO - | SHEET 1 OF 1

All rights reserved. The drawing and the information contained or depicted herein are the sole property of Firetrol, Inc. Copies are communicated to the recipient in strict confidence and may not be retransmitted, published, reproduced, copied or used in any manner, including as the basis for the manufacture or sale of any products, without the express prior written consent of Firetrol, Inc.

Field Connections

FTA950

Power Transfer Switch For Use With MARK[III] Electric Fire Pump Controllers

Power Terminals

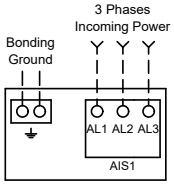

Notes:
1 - Controller is phase sensitive. Incoming lines must be connected in ABC sequence.

COPPER CONDUCTORS for Isolating Switch (AIS1).
Field Wiring According to Bending Space (AWG or MCM). Terminals AL1 - AL2 - AL3

Bending Space	5 " (127 mm)							8 " (203 mm)		
HP / Voltage	5	7.5	10	15	20	25	30	40	50	60
208	1x (10 to 1/0)	1x (8 to 1/0)	1x (8 to 1/0)	1x (6 to 1/0)	1x (4 to 1/0)	1x (3 to 1/0)	1x (2 to 1/0)	1x (1/0 to 3/0)	1x (3/0 to 250)	1x (4/0 to 250)
220 to 240	1x (10 to 1/0)	1x (10 to 1/0)	1x (8 to 1/0)	1x (6 to 1/0)	1x (4 to 1/0)	1x (4 to 1/0)	1x (3 to 1/0)	1x (1 to 3/0)	1x (2/0 to 3/0)	1x (3/0 to 250)
380 to 416	1x (10 to 1/0)	1x (10 to 1/0)	1x (10 to 1/0)	1x (8 to 1/0)	1x (8 to 1/0)	1x (6 to 1/0)	1x (6 to 1/0)	1x (4 to 1/0)	1x (3 to 1/0)	1x (3 to 1/0)
440 to 480	1x (10 to 1/0)	1x (10 to 1/0)	1x (10 to 1/0)	1x (10 to 1/0)	1x (8 to 1/0)	1x (8 to 1/0)	1x (6 to 1/0)	1x (6 to 1/0)	1x (4 to 1/0)	1x (3 to 1/0)
600	1x (10 to 1/0)	1x (10 to 1/0)	1x (10 to 1/0)	1x (10 to 1/0)	1x (10 to 1/0)	1x (8 to 1/0)	1x (8 to 1/0)	1x (6 to 1/0)	1x (6 to 1/0)	1x (4 to 1/0)

Bending Space	12 " (305 mm)				16 " (406 mm)						
HP / Voltage	75	100	125	150	200	250	300	350	400	450	500
208	2x (1/0 to 500)	2x (2/0 to 500)	2x (4/0 to 500)	2x (250 to 500)	3x (4/0 to 500)	--------	--------	--------	--------	--------	--------
220 to 240	1x (250)	2x (2/0 to 500)	2x (3/0 to 500)	2x (4/0 to 500)	2x (350 to 500)	3x (250 to 500)	--------	--------	--------	--------	--------
380 to 416	1x (1/0 to 3/0)	1x (3/0 to 250)	1x (250)	2x (1/0 to 500)	2x (3/0 to 500)	2x (4/0 to 500)	2x (300 to 500)	2x (400 to 500)	3x (250 to 500)	3x (300 to 500)	--------
440 to 480	1x (1 to 3/0)	1x (2/0 to 3/0)	1x (3/0 to 250)	1x (4/0 to 250)	2x (1/0 to 500)	2x (3/0 to 500)	2x (4/0 to 500)	2x (300 to 500)	2x (350 to 500)	2x (400 to 500)	3x (250 to 500)
600	1x (3 to 1/0)	1x (1 to 3/0)	1x (2/0 to 3/0)	1x (3/0 to 250)	1x (250)	2x (2/0 to 500)	2x (3/0 to 500)	2x (4/0 to 500)	2x (250 to 500)	2x (300 to 500)	2x (350 to 500)
Bending Space	5 " (127 mm)	8 " (203 mm)				12 " (305 mm)					

Remote Alarm Terminals (TSB1)

Terminals Wire Size:
24 - 12 AWG
0.5 Nm

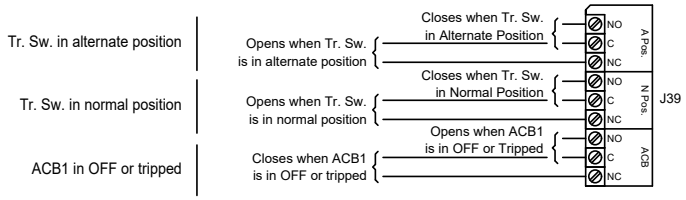

Control Terminals (TSB1)

Terminals Wire Size:
24 - 12 AWG
0.5 Nm

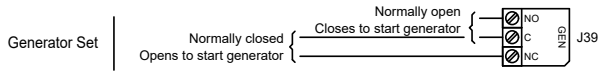

Drawing for information only.
Manufacturer reserves the right to modify this drawing without notice.
Contact manufacturer for "As Built" drawing.

REVISION DESCRIPTION	REV	ECN NO	BY	APP	DATE
REVISED TO AGREE W/CURRENT MANUFACTURING	A	-	CIR	CIR	1-14-21

	SIZE	BY	DATE
THIRD ANGLE PROJECTION	A		
	DRAWN BY	CIR	11-10-19
	FINAL APPROVAL	CIR	11-10-19

Firetrol, Inc.

© Firetrol, Inc. Not for construction.
Subject to change without notice.

FIELD CONNECTIONS | FTA950

POWER TRANSFER SWITCH FOR GENERATOR OR SECOND UTILITY POWER SOURCE

DRAWING NUMBER FC950-65

DWG REV A | ECN NO - | SHEET 1 OF 1

All rights reserved. The drawing and the information contained or depicted herein are the sole property of Firetrol, Inc. Copies are communicated to the recipient in strict confidence and may not be retransmitted, published, reproduced, copied or used in any manner, including as the basis for the manufacture or sale of any products, without the express prior written consent of Firetrol, Inc.