Submittal Package

FTA3110M

MarkIIXG Electric Fire Pump Controllers - Variable Speed Starting with Autotransformer Bypass

Project Information

VOLTAGE/POWER TABLE	
LINE VOLTAGE	MOTOR HORSEPOWER
200-208	40
220-240	40
380-415	75
440-480	75-100
550-600	60-75

DRAWINGS INCLUDED IN THIS PACKAGE ARE FOR STANDARD CONTROLLERS. ACTUAL "AS BUILT" DRAWINGS MAY DIFFER FROM THOSE SHOWN HERE.

Firetrol, Inc.
3412 Apex Peakway
Apex, North Carolina 27502
P +1 919 460 5200
F +1 919 460 5250
www.firetrol.com

While every precaution has been taken to ensure accuracy and completeness herein, Firetrol, Inc. assumes no responsibility, and disclaims all liability, for damages resulting from use of this information or for any errors or omissions. Specifications and drawings are subject to change without notice. ©2020 Firetrol, Inc., All Rights Reserved.

Publication SBP3110M-03

Firetrol Mark IIxG Electric Fire Pump Controller

FTA3110M - Variable Speed Starting with Autotransformer Starting Bypass

Specifications

1.0 Main Fire Pump Controller

The Mark IIxg FTA 3110M provides a variable frequency drive (VFD) in a PID process control loop to control the speed of a centrifugal pump for the purpose of limiting the system pressure in a sprinkler system used for fire protection. The controller shall control a fire pump motor having the horsepower, voltage, phase and frequency rating shown on the plans and drawings. The controller shall be equipped with both automatic and manual bypass to start and run the motor should a problem arise with the VFD. The controller shall be provided with an autotransformer starting bypass.

1.1 Standards, Listings & Approvals

The controller shall conform to all the requirements of the latest editions of:
NFPA 20, *Standard for the Installation of Stationary Pumps for Fire Protection*
NFPA 70, *National Electrical Code*.

The controller shall be listed by:
Underwriters Laboratories, Inc., in accordance with UL218, *Standard for Fire Pump Controllers* Canadian Standards Association CSA-C22.2, *Standard for Industrial Control Equipment* (cUL)
CE - Low Voltage Directive

The controller shall be approved by:
Factory Mutual (IEC 62091)
The City of New York for fire pump service

1.2 Enclosure

The controller components shall be housed in a NEMA Type 12 (IEC IP54) drip-proof, floor mounted enclosure.

1.3 Withstand Ratings (Short Circuit Current Ratings)

All controller components shall be front mounted, wired and front accessible for maintenance. The minimum withstand rating of the controllers shall not be less than 100,000 Amps RMS Symmetrical at 200-600 Volts*. If the available system fault current exceeds these ratings, the controllers shall be supplied with a withstand rating of 150,000 or 200,000 Amps RMS Symmetrical, as required.
*Note: 100,000 Amp withstand rating not available in some larger horsepowers. Consult factory for details.

1.4 Isolation Switch and Circuit Breaker

The controller shall include a motor rated combination isolating disconnect switch/circuit breaker, mechanically interlocked and operated with a single, externally mounted handle. When moving the handle from OFF to ON, the interlocking mechanism shall sequence the isolating disconnect switch ON first, and then the circuit breaker. When the handle is moved from ON to OFF, the interlocking mechanism shall sequence the circuit breaker OFF first, and then the isolating disconnect switch.
The isolating disconnect switch/circuit breaker shall be mechanically interlocked so that the enclosure door cannot be opened with the handle in the ON position except by a hidden tool operated bypass mechanism. The isolating disconnect switch/circuit breaker shall be capable of being padlocked in the OFF position for installation

and maintenance safety, and shall also be capable of being locked in the ON position without affecting the tripping characteristics of the circuit breaker. The controller door shall have a locking type handle and three point cam and roller vault type hardware. The circuit breaker trip curve adjustment shall be factory set, tested and sealed for the full load amps of the connected motor. The circuit breaker shall be capable of being field tested to verify actual pick up, locked rotor, and instantaneous trip points after field installation without disturbing incoming line and load conductors.

1.5 Operator Interface

The fire pump controller shall feature an operator interface with user keypad. The interface shall monitor and display motor operating conditions, including all alarms, events, and pressure conditions. All alarms, events, and pressure conditions shall be displayed with a time and date stamp. The display shall be a 128x64 Backlit LCD capable of customized graphics. The display and interface shall be NEMA rated for Type 2, 3R, 4, 4X, and 12 protection and shall be fully accessible without opening the controller door. The display and user interface shall utilize multiple levels of password protection for system security. A minimum of 3 password levels shall be provided.

1.6 Ammeter/Voltmeter

The fire pump controller operator interface shall be capable of displaying true RMS digital motor voltage and current measurements for all three phases simultaneously. Displays requiring push-button and selector switches to toggle between phases or current and voltage shall not be accepted.

Voltage and current shall be measured by True RMS technology to provide the most accurate measurement for all sine waves, including non-sinusoidal waveforms. Average responding meters will not be accepted.

1.7 Solid State Pressure Transducers

The controller shall be supplied with two solid state pressure transducers with a range of 0-300 psi (0-20.7 bar) ±1 psi. One transducer shall be an input to the Mark IIxg and for display of the system pressure and the other transducer shall be a pressure input to the drive for speed control.

Start, Stop and System Pressure shall be digitally displayed and adjustable through the user interface. The pressure transducers shall be mounted inside the controller to prevent accidental damage. The pressure transducers shall be directly pipe mounted to a bulkhead pipe coupling without any other supporting members. Field connections shall be made externally at the controller couplings to prevent distortion of the pressure sensing elements.

1.8 VFD Modes of Operation

The controller shall operate a variable frequency drive (VFD) in a PID process control loop to control the speed of a centrifugal pump for the purpose of limiting the system pressure in a sprinkler system used for fire protection. The PID closed-loop controller, resident in the Control Techniques VFD, receives its set point from the Mark IIxg and its feedback from a pressure transducer measuring the system pressure. The output of the PID shall be connected to the speed input of the drive which controls the speed of the AC induction motor driving the pump to maintain the system pressure at the set point. The operator interface as the overall fire pump control device is to respond automatically to a low pressure condition with a call to start of the VFD. The Mark IIxg shall monitor and control the operation of VFD via 1) the RS485 serial communications link to the drive and 2) the discrete digital I/O lines to the control terminals of the drive. The VFD shall be entirely configured by the Mark IIxg through the serial communications link as well. Upon detection of a failure in the drive, it shall bypass and isolate the VFD through the line and load isolation contactors, and run the pump across-the-line at rated speed after

first soft starting. The operator may choose to manually operate the drive in BYPASS or VFD. Operation in Bypass mode produces both an audible local alarm and a remote alarm for annunciation of an abnormal condition in the controller.
Set pressure is maintained until the min. run time of 10 minutes expires whereupon the controller temporarily lowers the set pressure in order to ramp the drive down sufficiently in speed to perform a sincerity check on system pressure for a period of 5-10 seconds. If system pressure remains above the start pressure during the sincerity check, then system pressure is stable, indicating there is no longer a demand for flow. Since the low pressure condition no longer exists, the Mark IIxg soft stops the drive.

1.9 VFD Mode - Manual Operation

The pump may be operated manually via the local start and stop push-buttons. If the VFD is Ready, the controller will soft start the drive which will ramp the pump up to the speed required to maintain set pressure under PID control upon the operation of the start push-button.
Set pressure is maintained until the operator presses stop, whereupon the controller temporarily lowers the set pressure in order to ramp the drive down sufficiently in speed to perform a sincerity check on system pressure for a period of 5-10 seconds. If system pressure remains above the start pressure during this sincerity check, then system pressure is stable, indicating there is no longer a demand for flow, and the Mark IIxg proceeds to soft stop the drive.
If system pressure falls below the start pressure during the sincerity check, a low pressure condition has developed which the Mark IIxg recognizes as an automatic call to start. The Mark IIxg responds to the call to start by resetting the PID reference to set pressure which ramps the pump back up set pressure. The Mark IIxg will continue operating the controller in automatic until system pressure stabilizes indicating there is no longer a demand for flow.

2.0 VFD Mode - Emergency Run

If an attempt to engage the emergency run bar is made in VFD mode, the Mark IIxg shall drop the drive out of the circuit and go to bypass using the hard stop drive procedure. An over pressure event will be captured and displayed as an alarm message on the Mark IIxg if system pressure (not PID feedback pressure) is equal to or greater than 115% of Set pressure. A time delay used in the Over Pressure alarm logic shall be applied to avoid nuisance alarms.

2.1 VFD SMARTCARD Operation

The drive shall have a smart card memory device for saving set up parameters downloaded into the drive from the Mark IIxg. This can serve as a valuable backup for those critical parameters entered into the Mark IIxg by the operator to tune the drive, i.e. Pgain, Igain, acceleration, deceleration, etc. If the Mark IIxg failed, its replacement could obtain these important parameters from the smart card if during system initialization, it detects that these parameters are different from the defaults and that these parameters are valid, i.e. that they lie within established boundaries.
A weekly test timer shall be provided as standard. The controller shall have the ability to program the time, date, and frequency of the weekly test. In addition, the controller shall have the capability to display a preventative maintenance message for a service inspection. The message text and frequency of occurrence shall be programmable through the user interface.

2.2 Power Transfer Switch

The power transfer switch shall be an ASCO 7000 series switch with Group 5 control panel in a NEMA Type 12 (IEC IP54) drip-proof enclosure attached directly to or in close proximity to the fire pump controller. The fire pump controller/power transfer switch shall be factory assembled, wired and tested as a unit prior to shipment.

The automatic transfer switch shall consist of an inherently double throw power transfer switch mechanism and a microprocessor control panel to provide automatic operation. The transfer switch and control panel shall be of the same manufacturer. The transfer switch control panel shall have a 4 line 20 character LCD display and keypad for viewing all available data and setting desired operational parameters. Voltage and frequency on both the normal and emergency sources shall be continuously monitored. Source status screens shall be provided for both normal and emergency to provide digital readout of voltage frequency and phase rotation on all 3 phases.

Designs utilizing components of molded case circuit breakers, contactors or parts thereof which are not intended for continuous duty, repetitive switching or transfer between two active power sources are not acceptable.

2.3 Event Recording

Memory - The controller shall record all operational and alarm events to system memory. All events shall be time and date stamped and include an index number. The system memory shall have the capability of storing 3000 events and allow the user access to the event log via the user interface. The user shall have the ability to scroll through the stored messages in groups of 1 or 10.

2.4 USB Host Controller

The controller shall have a built-in USB Host Controller. A USB port capable of accepting a USB Flash Memory Disk shall be provided. The controller shall save all operational and alarm events to the flash memory on a daily basis. Each saved event shall be time and date stamped. The total amount of historical data saved shall solely depend on the size of the flash disk utilized. The controller shall have the capability to save settings and values to the flash disk on demand via the user interface.

2.5 Seismic Certification

The controller shall be certified to meet or exceed the requirements of the 2012 International Building Code and the 2013 California Building Code for Importance Factor 1.5 Electrical Equipment for Sds equal to 1.88 or less severe seismic regions. Qualifications shall be based upon successful tri-axial shake-table testing in accordance with ICC-ES AC-156. Certification without testing shall be unacceptable. Controller shall be clearly labeled as rated for installation in seismic areas and a Certificate of Conformance shall be provided with the controller.

2.6 Manufacturer

The controller shall be a Firetrol brand.

3412 Apex Peakway
Apex, North Carolina 27502
P +1 919 460 5200
F +1 919 460 5250
www.firetrol.com

Firetrol™, Inc.

While every precaution has been taken to ensure accuracy and completeness herein, Firetrol, Inc. assumes no responsibility, and disclaims all liability, for damages resulting from use of this information or for any errors or omissions. Specifications and drawings are subject to change without notice. ©2019 Firetrol, Inc., All Rights Reserved.

Publication SP3110M-60

Product Description
FTA3100M, 3110M, 3130M

Mark IIXG Electric Fire Pump Controllers — Variable Speed Starting

Description – Firetrol® Variable Speed Electric Fire Pump Controllers provide a variable frequency drive (VFD) in a PID process control loop to control the speed of a centrifugal pump for the purpose of limiting system pressure in a fire sprinkler system. These controllers are available in the following configurations:
FTA3100M - VFD with Across-the-Line Bypass
FTA3110M - VFD with Autotransformer Bypass
FTA3130M - VFD with Digital Soft Start Bypass

Approvals – Firetrol fire pump controllers are listed by Underwriters' Laboratories, Inc., in accordance with UL218, *Standard for Fire Pump Controllers*, CSA, *Standard for Industrial Control Equipment*. They are built to meet or exceed the requirements of the approving authorities as well as NEMA, the latest editions of NFPA 20, *Installation of Centrifugal Fire Pumps*, NFPA 70, *National Electrical Code* and are approved by Factory Mutual.

Standard Features—The following are included as standard with each controller:

- Voltage surge protector
- Main Disconnect Switch sized for connected motor horsepower and voltage
- Fire pump Circuit Breaker
- Single handle Isolating Disconnect Switch/Circuit Breaker mechanism
- Motor contactor
- Emergency Manual Run Mechanism to mechanically close motor contactor contacts in an emergency condition
- Built-in Start and Stop push-buttons to bypass automatic start circuits
- Minimum Run Timer / Off Delay Timer
- Daylight Savings Time Option
- Weekly Test Timer
- Elapsed Time Meter
- Door mounted display/interface panel featuring a 128 x 64 pixel backlit LCD Graphical Display, Membrane Type User Control Push-buttons and easy to read LED Indicators for:
  - POWER AVAILABLE
  - ALARM
  - TRANSFER SWITCH NORMAL (If unit ordered with Automatic Power Transfer Switch)
  - TRANSFER SWITCH EMERGENCY (If unit ordered with Automatic Power Transfer Switch)
  - SYSTEM PRESSURE LOW
  - PUMP RUNNING
  - DELUGE OPEN
  - REMOTE START
  - INTERLOCK ON
  - FAIL TO START
  - MOTOR OVERLOAD
  - EMERGENCY ISO SWITCH OFF (If unit ordered with Automatic Power Transfer Switch)
  - PHASE FAILURE
  - PHASE REVERSAL
  - AUTOMATIC SHUTDOWN DISABLED
  - OVERVOLTAGE
  - UNDERVOLTAGE
- Digital Pressure Display
- USB Host Controller and Port
- Solid State Pressure Transducer

- Data Log
- Event Log (3000 Events)
- True RMS Metering with simultaneous 3 Phase Display of Amps, Volts, Frequency, Pressure and Alarm Messages
- Disk Error message
- Disk Near Full message
- Pressure Error message
- Motor Over 320% message
- Local Start message
- Remote Start message
- Emergency Start message
- Fail To Start message
- Undervoltage message
- Overvoltage message
- NEMA Type 12 enclosure (IEC IP54)
- Suitable for use as Service Equipment
- Each standard controller comes with user configurable options for:
  • Interlock Alarm • Low Pressure Audible
  •Low Suction • Pump Run
  • User Defined Input • Weekly Test
- Drive Ready pilot light
- Bypass Active pilot light
- Normal / Bypass selector switch

FOR MODEL # INFORMATION SEE
PUBLICATON SD3100-60

FOR OPTIONS AND MODIFICATIONS SEE
PUBLICATION OP3100-71

Firetrol, Inc.
3412 Apex Peakway
Apex, North Carolina 27502
P +1 919 460 5200
F +1 919 460 5250
www.firetrol.com
While every precaution has been taken to ensure accuracy and completeness herein, Firetrol, Inc. assumes no responsibility, and disclaims all liability, for damages resulting from use of this information or for any errors or omissions. Specifications and drawings are subject to change without notice. ©2019 Firetrol, Inc., All Rights Reserved.
Publication PD3100M-60(A)

Firetrol

Mark IIxG Electric Fire Pump Controllers

General Starting Configuration

FTA3100M, 3110M, 3130M

Variable Speed Starting

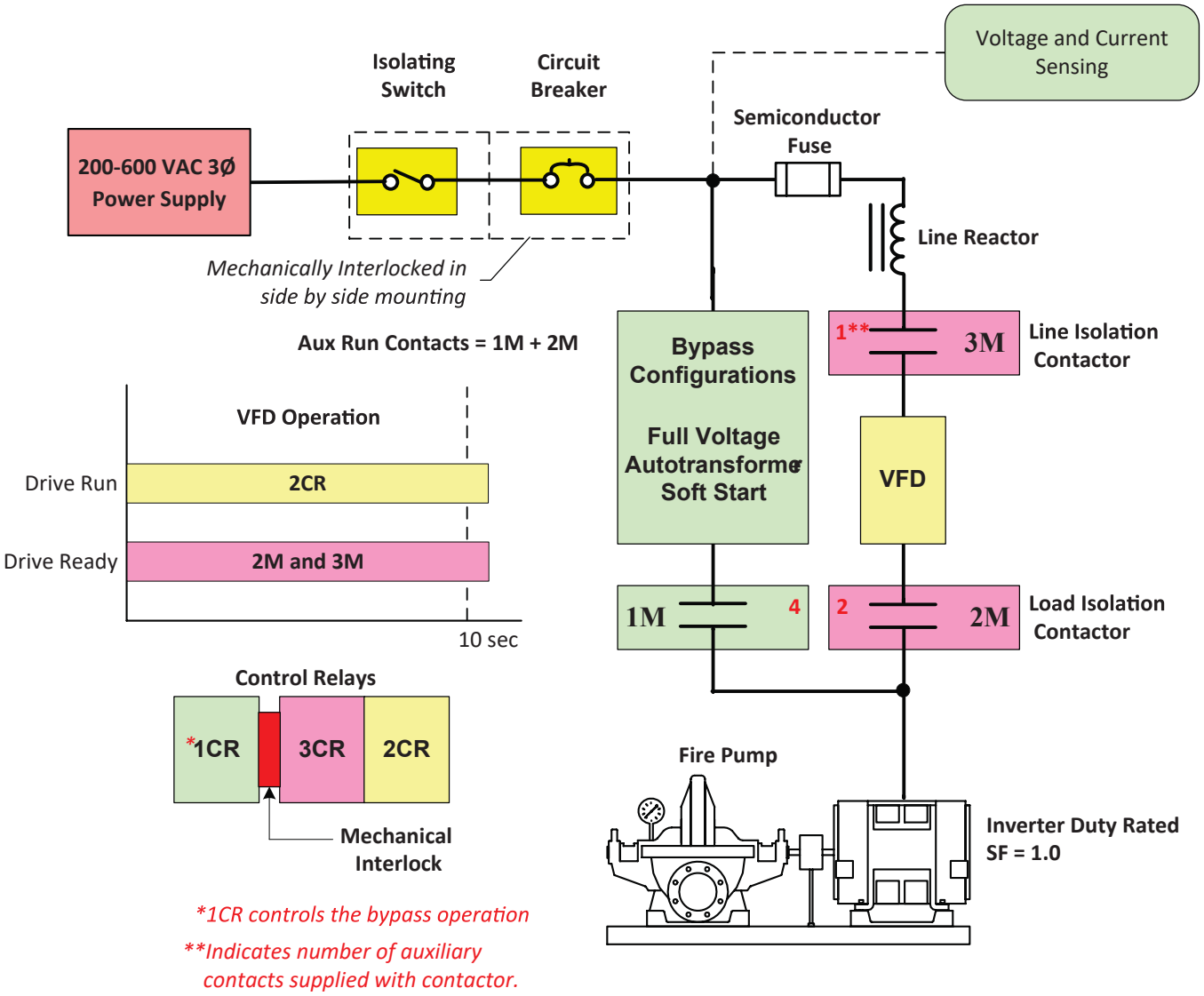

*1CR controls the bypass operation

**Indicates number of auxiliary contacts supplied with contactor.

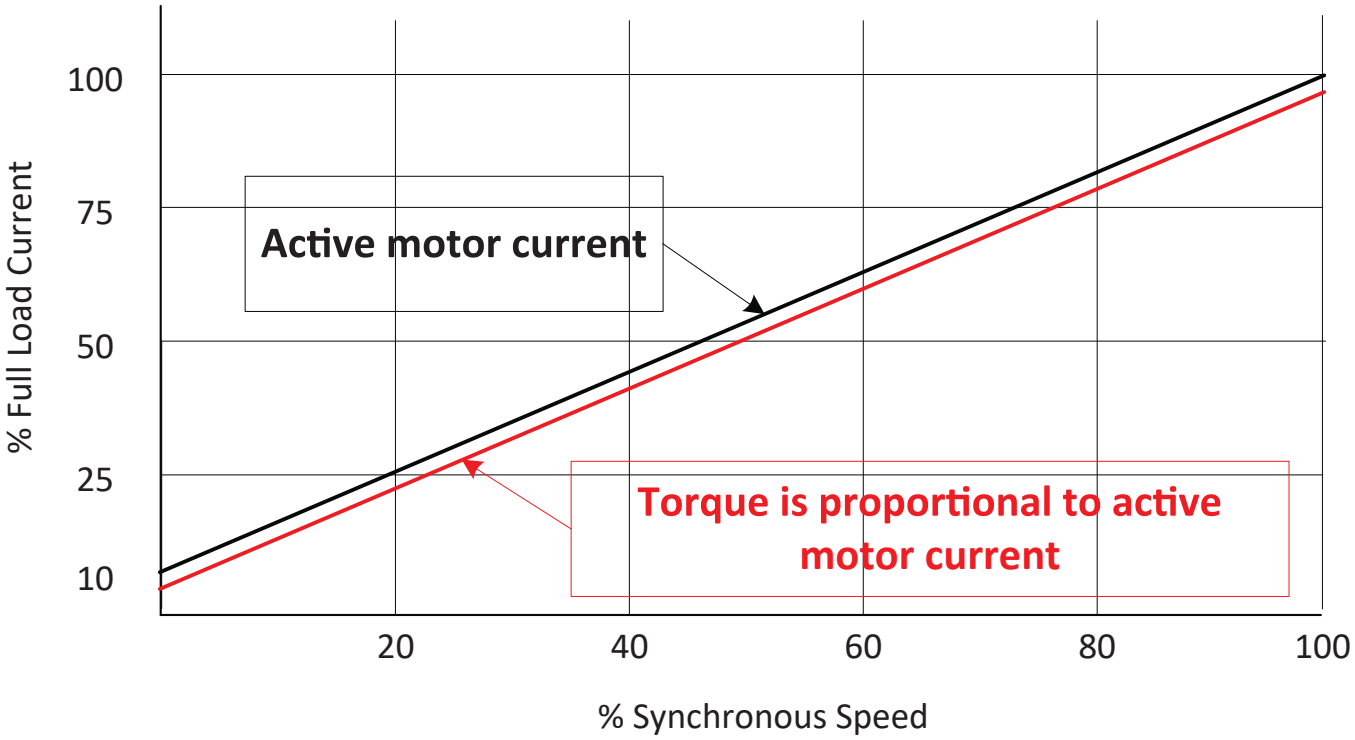

Firetrol, Inc.
3412 Apex Peakway
Apex, North Carolina 27502
P +1 919 460 5200
F +1 919 460 5250
www.firetrol.com
While every precaution has been taken to ensure accuracy and completeness herein, Firetrol, Inc. assumes no responsibility, and disclaims all liability, for damages resulting from use of this information or for any errors or omissions. Specifications and drawings are subject to change without notice. ©2019 Firetrol, Inc., All Rights Reserved.

Model Number Selection Guide

FTA3100M, 3110M, 3130M

Mark IIXG Electric Fire Pump Controllers

Variable Speed Starting

VARIABLE SPEED ELECTRIC FIRE PUMP CONTROLLERS

Example: FTA3130M-AM75B-xx

Bypass Method
- ☐ 3100M - VFD with Across-The-Line Bypass
- ○ 3110M - VFD with Autotransformer Bypass
- ○ 3130M - VFD with Digital Soft Start Bypass

Start/Stop Options
- ☐ A - Automatic start with timed permissive stop after minimum run time and manual start with manual stop, field convertible to automatic start and manual start with manual stop only
- ○ B - Automatic start and manual start with manual stop
- ○ C - Manual start and stop

Short Circuit Current Rating
- ☐ N - Intermediate short circuit rating 150,000 Amperes RMS Sym. at 200 - 600 V
- ☐ P - High short circuit rating 200,000 Amperes RMS Sym. at 200 - 600 V

Horsepower Rating
- ☐ 03 - 3 HP
- ○ 05 - 5 HP
- ○ 07 - 7 1/2 HP
- ○ 10 - 10 HP
- ○ 15 - 15 HP
- ○ 20 - 20 HP
- ○ 25 - 25 HP
- ○ 30 - 30 HP
- ○ 40 - 40 HP
- ○ 50 - 50 HP
- ○ 60 - 60 HP
- ○ 75 - 75 HP
- ○ 100 - 100 HP
- ○ 125 - 125 HP
- ○ 150 - 150 HP
- ○ 200 - 200 HP
- ○ 250 - 250 HP
- ○ 300 - 300 HP
- ○ 350 - 350 HP
- ○ 400 - 400 HP

Three Phase Voltage
- ☐ A - 220-240 Volt, 60 Hertz (230 V)
- ○ AZ - 220-230 Volt, 50 Hertz
- ○ B - 440-480 Volt, 60 Hertz (460 V)
- ○ BZ - 415 Volt, 50 Hertz
- ○ C - 550-600 Volt, 60 Hertz (575 V)
- ○ F - 380 Volt, 60 Hertz
- ○ FZ - 380 Volt, 50 Hertz
- ○ H - 208 Volt, 60 Hertz
- ○ HH - 200 Volt, 60 Hertz

Modifications
See Publication OP3100-71

Firetrol, Inc.
3412 Apex Peakway
Apex, North Carolina 27502
P +1 919 460 5200
F +1 919 460 5250
www.firetrol.com

While every precaution has been taken to ensure accuracy and completeness herein, Firetrol, Inc. assumes no responsibility, and disclaims all liability, for damages resulting from use of this information or for any errors or omissions. Specifications and drawings are subject to change without notice. ©2019 Firetrol, Inc., All Rights Reserved.

Publication SD3100M-60 Rev. A

Options & Modifications

FTA3100M - FTA3130M

Mark IIXG Variable Speed Electric Fire Pump Controllers

SPECIAL ENCLOSURES

Option	Description
☐ ---	Enclosure, NEMA Type 12 (IEC IP54), Painted Steel (Standard)
○ ---	Other - Enclosure (consult factory for availability)

CIRCUIT BREAKER OPTION*

Option	Description
☐ -N	Intermediate Short Circuit Current Rating - 150,000 Amps RMS Sym
☐ -P	High Short Circuit Current Rating - 200,000 Amps RMS Sym

* Note: Intermediate and High withstand ratings may not be available for all horsepower and voltage combinations. Consult factory for availability.

ANTI-CONDENSATION SPACE HEATERS

Option	Description
☐ None	
○ -H	Space Heater, 120V Externally Powered with Circuit Breaker
○ -J	Space Heater, 120V Externally Powered with Circuit Breaker & Thermostat
○ -K	Space Heater, 120V Externally Powered with Circuit Breaker & Humidistat
○ -L	Space Heater, 240V Externally Powered with Circuit Breaker
○ -M	Space Heater, 240V Externally Powered with Circuit Breaker & Thermostat
○ -N	Space Heater, 240V Externally Powered with Circuit Breaker & Humidistat

PRESSURE TRANSDUCERS, SOLENOID VALVES, PLUMBING

Option	Description
☐ ---	Wetted Parts including Pressure Sensor, 300 PSI (20.4 Bar) Fresh Water
○ -B	Wetted Parts including Pressure Sensor, 600 PSI (42 Bar) Fresh Water
○ -C	Wetted Parts including Pressure Sensor, 300 PSI (20.4 Bar), Sea Water
○ -D	Wetted Parts including Pressure Sensor, 500 PSI (34.5 Bar), Sea Water

ALARMS

Option	Description
☐ -AC	Extra Alarm Output Contacts, Pump Operating (2 Form-C)
☐ -AF	Alarm, Audible/Visible, Low Pump Room Temperature
☐ -AG	Alarm, Audible/Visible, Reservoir Low
☐ -AH	Alarm, Audible/Visible, Low Suction Pressure
☐ -AM	Alarm Output Contacts, Fail to Start
☐ -AV	Alarm Output Contacts, Low Pump Room Temperature (Requires Option -AF)
☐ -AW	Alarm Output Contacts, Reservoir Low (Requires Option -AG)
☐ -AY	Alarm Output Contacts, Low Suction Pressure (Requires Option -AH)
☐ -BW	Alarm Output Contacts, Phase Failure/Phase Reversal
☐ -BY	Alarm Output Contacts, Pump Overload
☐ -COM	Alarm, Audible/Visible/Output Contacts, Low Suction Pressure with Manual Reset Option, Pressure Switch NOT Included (Do not use Options -AH or -AY)
☐ -CTS	Alarm, Audible/Visible/Output Contacts, Low Suction Pressure Shutdown with Manual Reset Option and Pressure Switch (Do not use Options -AH or -AY)
☐ -EG	Alarm Audible/Visible, Main Relief Valve Discharge
☐ -EH	Alarm Output Contacts, Main Relief Valve Discharge (Requires Option -EG)
☐ -EJ	Alarm Audible/Visible, Flow Meter On
☐ -EK	Alarm Output Contacts, Flow Meter On (Requires Option -EJ)
☐ -KH	Alarm Output Contacts, Common Alarm
☐ -JR	Visible Indicator, Jockey Pump Operating

ALARMS Cont..

Option		Description
☐	-JT	Alarm, Audible/Visible, Jockey Pump Trouble
☐	-P	Alarm, Audible/Visible, Built-In 120V Supervisory System (Includes Visible Supervisory Voltage Normal Indication and Audible Pump Operating, Phase Failure and Phase Reversal Indication
☐	-PE	Alarm Output Contacts, Low System Pressure (Pump on Demand)
☐	-PT	Alarm, Audible/Visible, Built-In 240V Supervisory System (Includes Visible Supervisory Voltage Normal Indication and Audible Pump Operating, Phase Failure and Phase Reversal Indication

MISCELLANEOUS

Option		Description
☐	-AZ	Thermostat, Low Pump Room Temperature, Mounted and Wired
☐	-ED	Output Contacts, Load Shed (Selectable power source and adjustable time delay to remove non-critical loads before starting)
☐	-EL	Series Pumping Operation, High Zone Controller
☐	-EM	Series Pumping Operation, Mid Zone Controller
☐	-EN	Series Pumping Operation, Low Zone Controller
☐	-FZX	Rating, nameplate to be marked 380-400V (Use with voltage code “F” or “FZ”)
☐	-IEC	Marking, CE with External Wet Parts (Requires NEMA Type 12 (IP54) Enclosure as Minimum)
☐	-IECI	Marking, CE with Internal Wet Parts (Requires NEMA Type 12 (IP54) Enclosure as Minimum)
☐	-OSP	OSHPD Seismic Certification (State of California) (Requires Option -SEI)
☐	-MZN	Neutral Lug, Service Entrance, Non-Insulated Bonded to Enclosure
☐	-PK	Terminal Blocks, Extra Remote Start
☐	-PY	Output Contacts, Motor Space Heater, Externally Powered
☐	-S	Tropicalization
☐	-SEI	Marking, Seismic Certified (In accordance with IBC)
☐	-USBX	Data Port, External USB
☐	-ZPA	Scheduled Service Message (When factory programmed or programmed by Firetrol representative during start-up
☐	-ZPM	Data Port, Serial Modbus RTU Over 2-wire or 4-wire RS485
☐	-ZPN	Data Port, Serial Modbus RTU Over Ethernet TCP/IP
☐	-XCR	Export Packaging (Wooden Crating to Conform to IPPC Standards

Firetrol, Inc.
3412 Apex Peakway
Apex, North Carolina 27502
P +1 919 460 5200
F +1 919 460 5250
www.firetrol.com
While every precaution has been taken to ensure accuracy and completeness herein, Firetrol, Inc. assumes no responsibility, and disclaims all liability, for damages resulting from use of this information or for any errors or omissions. Specifications and drawings are subject to change without notice. ©2019 Firetrol, Inc., All Rights Reserved.
Publication OP3100M-71

Dimensions and Shipping Weight

FTA3110M

MarkIIXG Electric Fire Pump Controllers - Variable Speed Starting with Autotransformer Bypass

FRONT VIEW

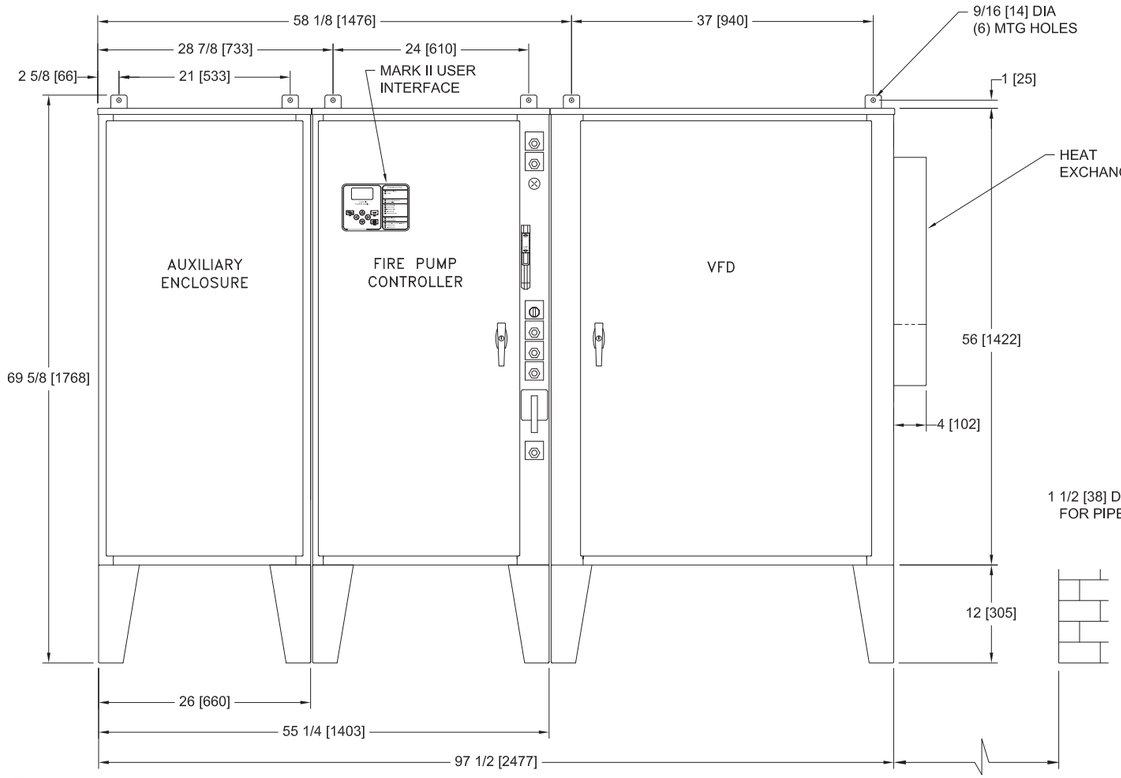

RIGHT SIDE VIEW

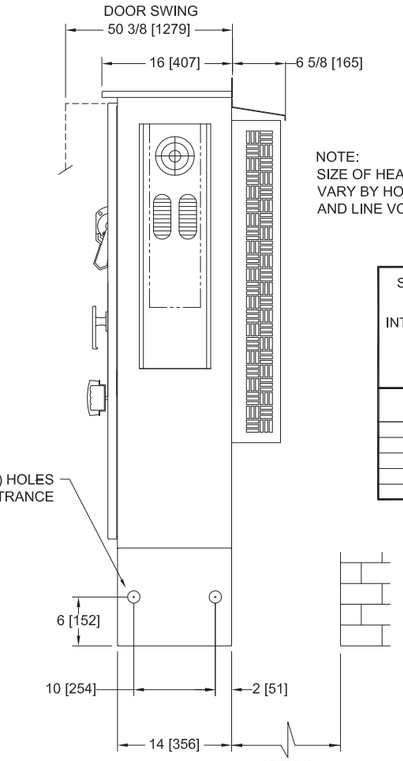

NOTE:
SIZE OF HEAT EXCHANGERS VARY BY HORSEPOWER RATING AND LINE VOLTAGE

STANDARD WITHSTAND RATINGS 200-600V - 100,000 Amps RMS Sym.	
INTERMEDIATE WITHSTAND RATINGS 200-600V - 150,000 Amps RMS Sym.	
HIGH WITHSTAND RATINGS 200-600V - 200,000 Amps RMS Sym.	
LINE VOLTAGE	MOTOR HORSEPOWER
200-208	□ 40
220-240	□ 40
380-415	□ 75
440-480	□ 75-100
550-600	□ 60-75

NOTE:
TEST DRAIN CONNECTION MUST BE PIPED TO WASTE DRAIN. FAILURE TO CONNECT TO A FLOOR DRAIN WILL RESULT IN UNSAFE CONDITIONS OF STANDING WATER AROUND CONTROLLER

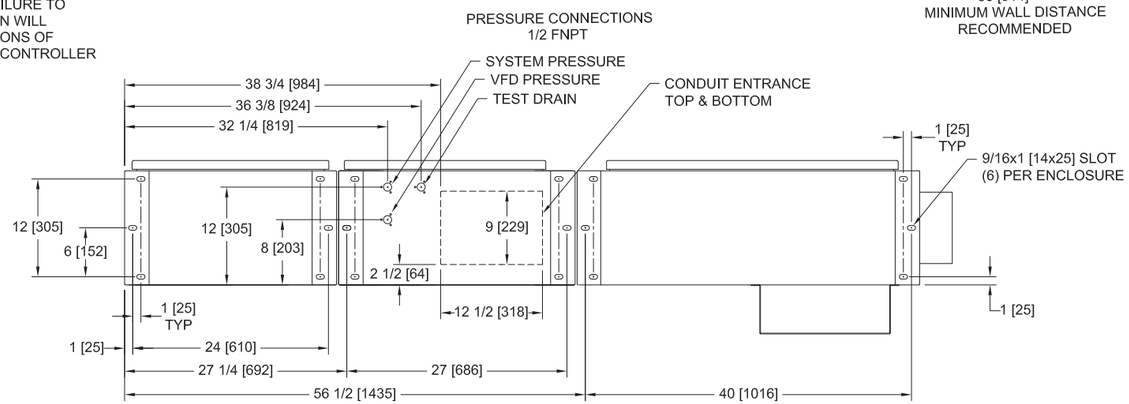

BOTTOM VIEW

NOTES:

1. DO NOT INSTALL IN AMBIENT TEMPERATURES ABOVE 40°C [104°F] OR BELOW 5°C [41°F]
2. ALL DIMENSIONS IN INCHES [MM]
3. FOR HORSEPOWER OR WITHSTAND RATINGS NOT LISTED IN THIS TABLE, REFER TO ED3110M-01
4. DRAWINGS USED FOR CONSTRUCTION PURPOSES MUST BE OBTAINED FROM FIRETROL OR THE LOCAL FIRETROL REPRESENTATIVE
5. ALL CONTROLLERS TO BE A MINIMUM NEMA TYPE 12

THIRD ANGLE PROJECTION	SIZE B	BY	DATE
	DRAWN BY	JMW	5-8-19
	FINAL APPROVAL	CIR	5-8-19

Firetrol, Inc.

© Firetrol, Inc. Not for construction. Subject to change without notice.

RELEASED	-	276990	JMW	CIR	5-8-19
REVISION DESCRIPTION	REV	ECN NO	BY	APP	DATE

ENCLOSURE DIMENSIONS | FTA3110M

VFD ELECTRIC FIRE PUMP CONTROLLER WITH AUTOTRANSFORMER BYPASS

DRAWING NUMBER DD-3110M-03

DWG REV - ECN NO 276990 SHEET 1 OF 1

All rights reserved. The drawing and the information contained or depicted herein are the sole property of Firetrol, Inc. Copies are communicated to the recipient in strict confidence and may not be retransmitted, published, reproduced, copied or used in any manor, including as the basis for the manufacture or sale of any products, without the express prior written consent of Firetrol, Inc.

MarkII XG Electric Fire Pump Controllers - Variable Speed Starting with Autotransformer Bypass

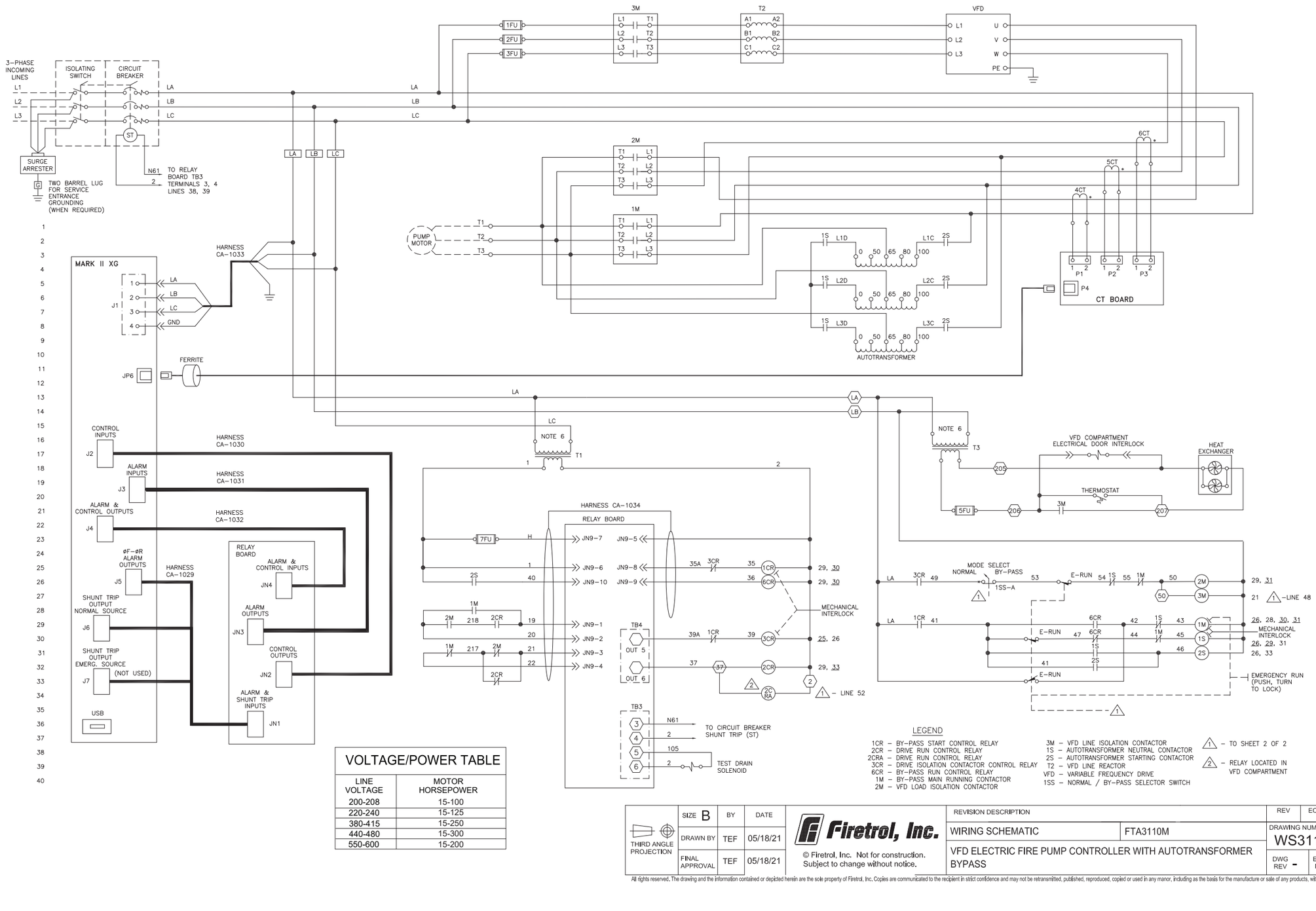

VOLTAGE/POWER TABLE	
LINE VOLTAGE	MOTOR HORSEPOWER
200-208	15-100
220-240	15-125
380-415	15-250
440-480	15-300
550-600	15-200

LEGEND

1CR – BY-PASS START CONTROL RELAY
2CR – DRIVE RUN CONTROL RELAY
2CRA – DRIVE RUN CONTROL RELAY
3CR – DRIVE ISOLATION CONTACTOR CONTROL RELAY
6CR – BY-PASS RUN CONTROL RELAY
1M – BY-PASS MAIN RUNNING CONTACTOR
2M – VFD LOAD ISOLATION CONTACTOR
3M – VFD LINE ISOLATION CONTACTOR
1S – AUTOTRANSFORMER NEUTRAL CONTACTOR
2S – AUTOTRANSFORMER STARTING CONTACTOR
T2 – VFD LINE REACTOR
VFD – VARIABLE FREQUENCY DRIVE
1SS – NORMAL / BY-PASS SELECTOR SWITCH

1 – TO SHEET 2 OF 2

2 – RELAY LOCATED IN VFD COMPARTMENT

THIRD ANGLE PROJECTION	SIZE B	BY	DATE
	DRAWN BY	TEF	05/18/21
	FINAL APPROVAL	TEF	05/18/21

Firetrol, Inc.

© Firetrol, Inc. Not for construction. Subject to change without notice.

REVISION DESCRIPTION		REV	ECN NO	BY	APP	DATE
WIRING SCHEMATIC	FTA3110M					
VFD ELECTRIC FIRE PUMP CONTROLLER WITH AUTOTRANSFORMER BYPASS						

DRAWING NUMBER WS3110M-50

DWG REV -

ECN NO -

SHEET 1 OF 2

All rights reserved. The drawing and the information contained or depicted herein are the sole property of Firetrol, Inc. Copies are communicated to the recipient in strict confidence and may not be retransmitted, published, reproduced, copied or used in any manor, including as the basis for the manufacture or sale of any products, without the express prior written consent of Firetrol, Inc.

MarkII XG Electric Fire Pump Controllers - Variable Speed Starting with Autotransformer Bypass

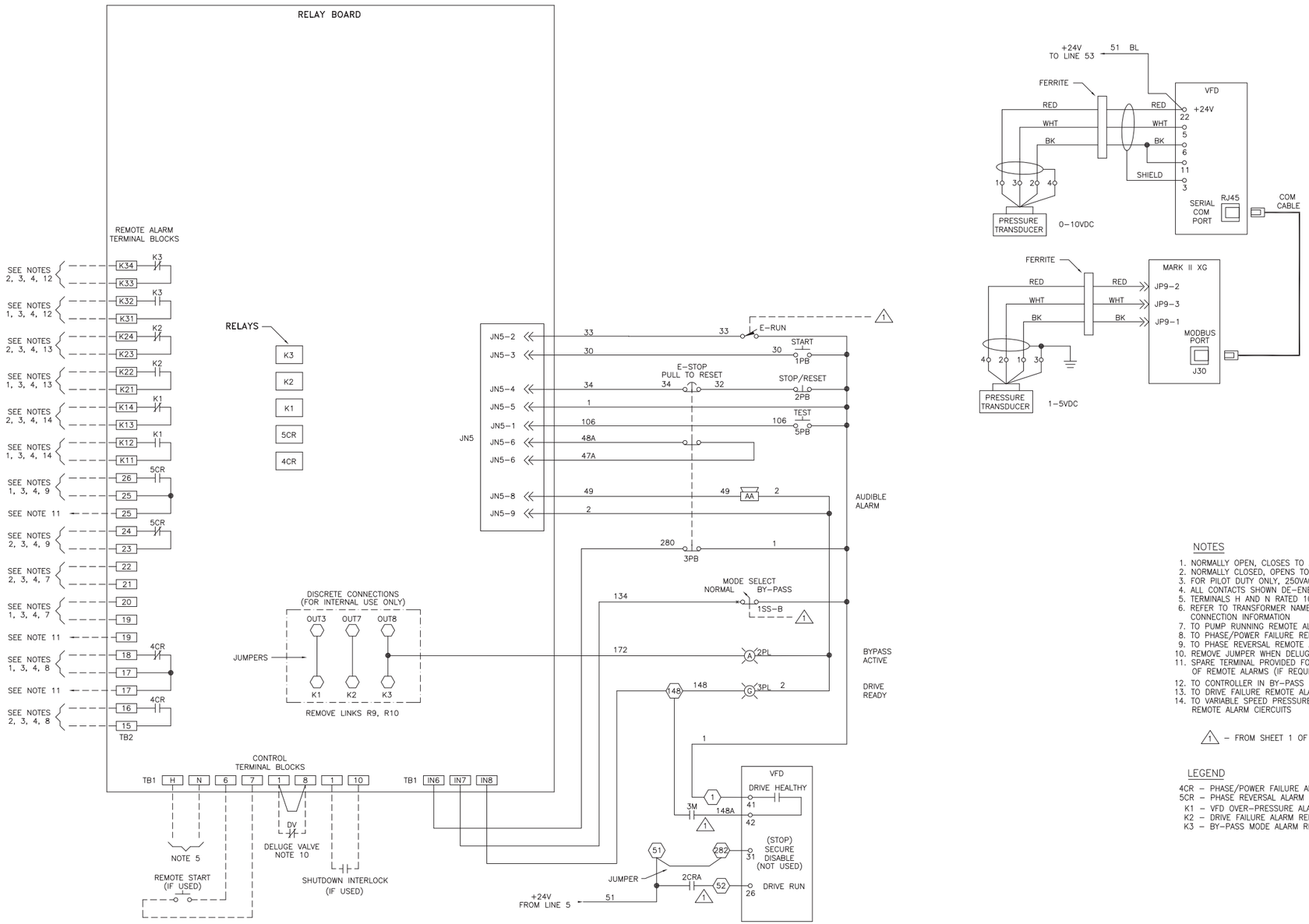

NOTES

1. NORMALLY OPEN, CLOSES TO ALARM
2. NORMALLY CLOSED, OPENS TO ALARM
3. FOR PILOT DUTY ONLY, 250VAC, 30VDC, 10A. MAX. LOAD
4. ALL CONTACTS SHOWN DE-ENERGIZED
5. TERMINALS H AND N RATED 100VA, 120VAC MAX. LOAD
6. REFER TO TRANSFORMER NAMEPLATE FOR CONNECTION INFORMATION
7. TO PUMP RUNNING REMOTE ALARM CIRCUITS
8. TO PHASE/POWER FAILURE REMOTE ALARM CIRCUITS
9. TO PHASE REVERSAL REMOTE ALARM CIRCUITS
10. REMOVE JUMPER WHEN DELUGE VALVE CONTACT IS USED
11. SPARE TERMINAL PROVIDED FOR PARALLEL CONNECTION OF REMOTE ALARMS (IF REQUIRED)
12. TO CONTROLLER IN BY-PASS MODE REMOTE ALARM CIRCUITS
13. TO DRIVE FAILURE REMOTE ALARM CIRCUITS
14. TO VARIABLE SPEED PRESSURE LIMITING CONTROL OVER-PRESSURE REMOTE ALARM CIERCUITS

(1) - FROM SHEET 1 OF 2

LEGEND

4CR - PHASE/POWER FAILURE ALARM RELAY
5CR - PHASE REVERSAL ALARM RELAY
K1 - VFD OVER-PRESSURE ALARM RELAY
K2 - DRIVE FAILURE ALARM RELAY
K3 - BY-PASS MODE ALARM RELAY

THIRD ANGLE PROJECTION	SIZE B	BY	DATE	Firetrol, Inc.	REVISION DESCRIPTION	REV	ECN NO	BY / APP / DATE
	DRAWN BY	TEF	05/18/21		WIRING SCHEMATIC / FTA3110M	DRAWING NUMBER WS3110M-50		
	FINAL APPROVAL	TEF	05/18/21	© Firetrol, Inc. Not for construction. Subject to change without notice.	VFD ELECTRIC FIRE PUMP CONTROLLER WITH AUTOTRANSFORMER BYPASS	DWG REV -	ECN NO -	SHEET 2 OF 2

All rights reserved. The drawing and the information contained or depicted herein are the sole property of Firetrol, Inc. Copies are communicated to the recipient in strict confidence and may not be retransmitted, published, reproduced, copied or used in any manor, including as the basis for the manufacture or sale of any products, without the express prior written consent of Firetrol, Inc.

MarkII XG Electric Fire Pump Controllers - Variable Speed Starting with Autotransformer Bypass

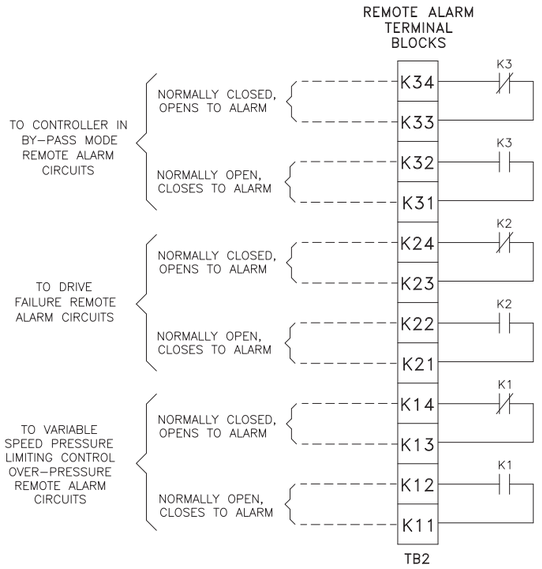

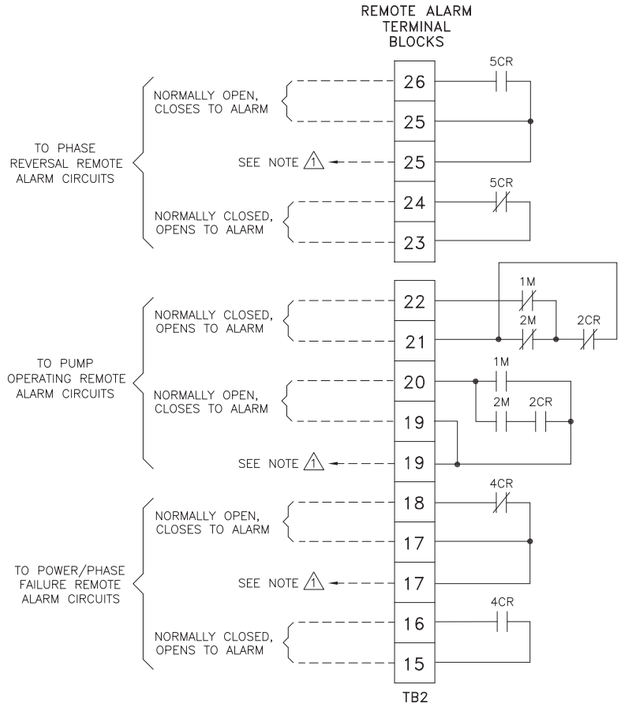

LINE TERMINALS–WIRE CAPACITY AND QUANTITY (CU) (1)

MAXIMUM MOTOR HORSEPOWER						WIRE SIZE (CU) PER PHASE	WIRE SIZE SERVICE ENTRANCE GROUND LUG (CU) (2)
200V	208V	220–240V	380–415V	440–480V	550–600V		
20	20	25	40	50	60	(1) #14 AWG–#1/0 AWG (1) 2.5 MM^2–50 MM^2	(2) #14 AWG–#2/0 AWG (2) 2.5 MM^2–70 MM^2
40	40	40	75	100	125	(1) #4 AWG–300 kcmil (1) 25 MM^2–150 MM^2	(2) #14 AWG–#2/0 AWG (2) 2.5 MM^2–70 MM^2
60	60	60	100	150	150	(1) #4 AWG–300 kcmil (1) 25 MM^2–150 MM^2	(2) #6 AWG–250 kcmil (2) 16 MM^2–120 MM^2
100	100	100	150	250	300	(1) 250 kcmil–500 kcmil (1) 120 MM^2–240 MM^2	(2) #6 AWG–250 kcmil (2) 16 MM^2–120 MM^2
---	125	125	200	---	---	(2) #3/0 AWG–250 kcmil (2) 95 MM^2–120 MM^2	(2) #6 AWG–250 kcmil (2) 16 MM^2–120 MM^2
200	200	250	350	500	---	(3) #2/0 AWG–400 kcmil (3) 70 MM^2 –200 MM^2	(2) #6 AWG–250 kcmil (2) 16 MM^2–120 MM^2
250	250	300	500	600	---	(4) #4/0 AWG–500 kcmil (4) 100 MM^2–240 MM^2	(2) #6 AWG–250 kcmil (2) 16 MM^2–120 MM^2

MOTOR TERMINALS–WIRE CAPACITY AND QUANTITY (CU) (1)

MAXIMUM MOTOR HORSEPOWER						WIRE SIZE (CU) PER PHASE
200V	208V	220–240V	380–415V	440–480V	550–600V	
30	30	40	60	75	100	(1) #6 AWG–#2/0 AWG (1) 16 MM^2–70 MM^2
50	50	60	75	125	150	(1) #6 AWG–250 kcmil (1) 16 MM^2–120 MM^2
75	75	100	150	200	250	(1) #4 AWG–400 kcmil (1) 25 MM^2–200 MM^2
100	100	---	---	250	300	(2) #4 AWG–500 kcmil (2) 25 MM^2–240 MM^2
200	200	200	350	500	---	(2) 250 kcmil–500 kcmil (2) 120 MM^2–240 MM^2
250	250	300	500	600	---	(3) #2/0 AWG–500 kcmil (3) 70 MM^2–240 MM^2

(1) FOR CORRECT WIRE SIZING, REFER TO *NATIONAL ELECTRICAL CODE*, NFPA 70.

(2) WHEN REQUIRED BY AUTHORITY HAVING JURISDICTION.

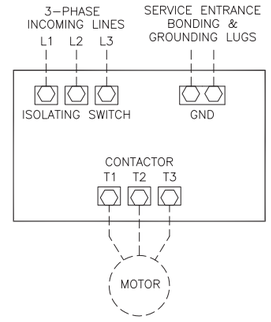

NOTES

1– Incoming line terminals are provided to accommodate wire sizes at 125% of motor full load current per NFPA 70, *National Electrical Code*, Table 430–250, Section 695.6(c), and Table 310–16, 75° rated Copper conductors.

2– Controller is phase rotation sensitive. Incoming lines L1, L2 and L3 must be in ABC, right hand rotation sequence for proper operation of the phase monitor.

3– Motor connections shown are typical. Since motor connections vary widely, refer to the motor connection diagram for specific wiring arrangement.

(1) SPARE TERMINALS PROVIDED FOR PARALLEL CONNECTION OF REMOTE ALARMS (IF REQUIRED)

NOTE: TERMINALS FOR CUSTOMER CONNECTIONS REQUIRE 3.5MM SLOTTED SCREW DRIVER

TERMINAL TIGHTENING TORQUE		
TERMINAL TYPE	WIRE SIZE	TIGHTENING TORQUE
CONTROL AND ALARM TERMINALS TB1, TB2	#14–12 AWG [2.5–4 MM^2]	5.6 lb–in [.6 Nm]

–USE COPPER CONDUCTORS ONLY–

–NOTE–
ALARM CONTACT RATING PILOT DUTY 250 VAC, 30 VDC 10 A. MAX. LOAD

PRESSURE SYSTEM CONNECTION 1/2" FNPT

CONTROL TERMINAL BLOCKS

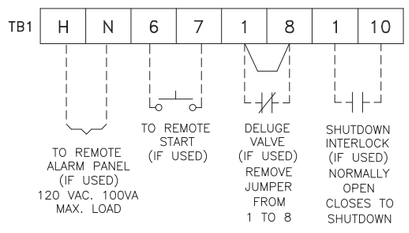

THIRD ANGLE PROJECTION	SIZE B	BY	DATE	Firetrol, Inc.	REVISION DESCRIPTION		REV	ECN NO	BY	APP	DATE
	DRAWN BY	TEF	05/18/21		FIELD CONNECTIONS	FTA3110M	DRAWING NUMBER FC3110M-50				
	FINAL APPROVAL	TEF	05/18/21	© Firetrol, Inc. Not for construction. Subject to change without notice.	VFD ELECTRIC FIRE PUMP CONTROLLER WITH AUTOTRANSFORMER BYPASS		DWG REV -	ECN NO -		SHEET 1 OF 1	

All rights reserved. The drawing and the information contained or depicted herein are the sole property of Firetrol, Inc. Copies are communicated to the recipient in strict confidence and may not be retransmitted, published, reproduced, copied or used in any manor, including as the basis for the manufacture or sale of any products, without the express prior written consent of Firetrol, Inc.